Cushman

# CE 10

# Service

MP-63571

Digitized by the Internet Archive
in 2025

https://archive.org/details/manualsplus_05436

MAINTENANCE MANUAL

# CE-70
# FREQUENCY
# SELECTIVE
# LEVELMETER

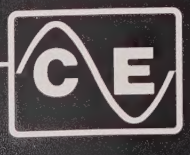


**Cushman**
Electronics, Inc.

APPLICABLE TO INSTRUMENTS
WITH SERIAL NUMBERS 301
AND ABOVE.

# CE-70
# FREQUENCY
# SELECTIVE
# LEVELMETER

## MAINTENANCE MANUAL

CUSHMAN
ELECTRONICS, INC.

01--0063--3

MAY 1980

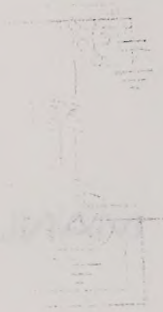

CUSHMAN
ELECTRONICS, INC.

# MANUAL CHANGE NOTICE

INSTRUMENT CE-70 MANUAL NO. 5601-0063 DATE PRINTED Nov. 1976

The following changes are necessary to bring your manual up to date. Changes are listed with the instrument serial numbers to which they apply. It is suggested that you enter these changes in your manual immediately.

Serial number 166 and up.

Schematic Diagram, p. 3-81, Figure 23, High Frequency Phase Lock Loop, 3500, add L29 as shown below:

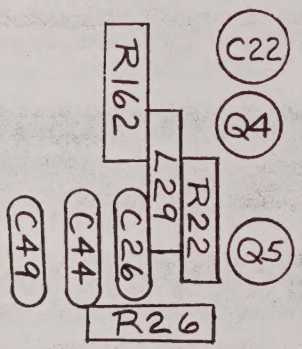


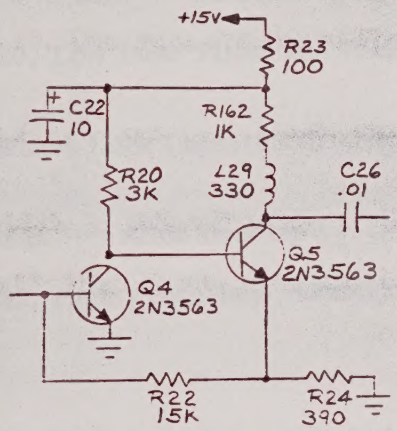


Serial number 196 and up.

Schematic Diagram, p. 3-71, Figure 22, 10 MHz Reference/Divider, 3400, add gate inverter from U6 as shown below:

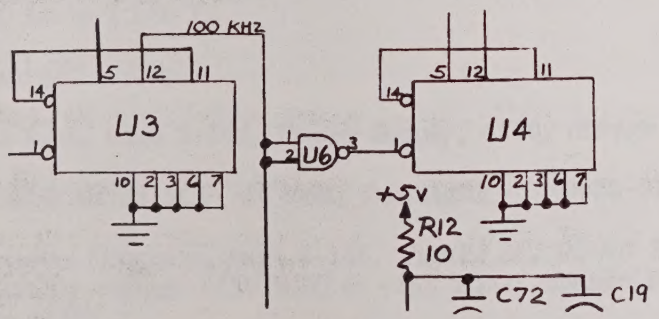

Serial number 111 and up.

Schematic Diagram and Component Layout, page 3-93, Figure 25, Low Frequency Phase Lock Loop, 3600, change Test Point (TP) 22 to 21, and 21 to 22.

Serial number 162 and up.

Parts List, page 3-90 and 3-91, Low Frequency Phase Lock Loop, 3600, change R98 and R161 as follows:

| | | | | |
|---|---|---|---|---|
| R98, R161 | Comp, 10K, ±5%, 1/4W | 1066-1035 | Allen Bradley | CB1035 |

Schematic Diagram, page 3-93 (Figure 25) and page 3-95 (Figure 26), Low Frequency Phase Lock Loop, change R98 and R161 to 10K.

Serial number 216 and up.

Parts List, page 3-55, Low Pass Filter and First Mixer, 3200, change Q8 as follows:

| | | | | |
|---|---|---|---|---|
| Q8 | Si, NPN, 2SC1424 | 1272-0071 | NEC | 2SC1424 |

Schematic Diagram, page 3-57, Figure 20, Low Pass Filter and First Mixer, 3200, change Q8 to 2SC1424.

Parts List, page 3-78, High Frequency Phase Lock Loop, 3500, change R100 as follows:

| | | | | |
|---|---|---|---|---|
| R100 | Comp, 16K, ±5%, 1/4W | 1066-1635 | Allen Bradley | CB1635 |

Schematic Diagram, page 3-81, Figure 23, High Frequency Phase Lock Loop, 3500, change R100 to 16K.

Serial number 266 and up.

Parts List, page 3-135, Semi-Automatic Cal/BFO, 4600, change L4 as follows:

| | | | |
|---|---|---|---|
| L4 | Coil, Variable 2 1/2 T | 1596-6602 | Cushman |

Schematic Diagram, page 3-139, Figure 32, Semi-Automatic Cal/BFO, 4600, change L4 to 2 1/2 T.

Serial number 283 and up.

Parts List, page 3-143, Power Supply, 4700, change U3 as follows:

| | | | | |
|---|---|---|---|---|
| U3 | IC - MC7815CP, 15 Volt, Pos Rgltr | 2025-0101 | Motorola | MC7815CP |

Schematic Diagram, page 3-145, Figure 34, Power Supply, 4700, change U3 to MC7815CP; change +12V REG to +15V REG; change P1 pin S,T output from +12V to +15V.

Parts List, page 3-41, Units Attenuator, 2600, change K1, K2, K3, and K4 to read as follows:

| | | | | |
|---|---|---|---|---|
| K1, K2, K3, K4 | Rly, DPDT, 18V | 1313-0030 | Teledyne | 712Y-18 |

Schematic Diagram, page 3-43, Figure 16, Units Attenuator, 2600, change P3 pin 1 to +15V, and at each relay remove pin 5 and its ground.

Parts List, page 3-37, Decade Attenuator, 2500, change K1, K2, K3, K4, and K5 as follows:

| | | | | |
|---|---|---|---|---|
| K1, K2, K3, K4, K5 | Rly, DPDT, 18V | 1313-0030 | Teledyne | 712Y-18 |

Schematic Diagram, page 3-39, Figure 15, Decade Attenuator, 2500, change P3 pin 1 to +15V, and at each relay remove pin 5 and its ground.

Parts List, page 3-54, Low Pass Filter and First Mixer, 3200, add the following between J4 and INDUCTORS:

RELAYS

| | | | | |
|---|---|---|---|---|
| K1 | Rly, DPDT, 18V | 1313-0030 | Teledyne | 712Y-18 |

Schematic Diagram, page 3-57, Figure 20, Low Pass Filter and First Mixer, 3200, at relay K1 remove pin 5 and its ground.

Parts List, page 3-135, Semi-Automatic Cal/BFO, 4600, change K1 as follows:

| | | | | |
|---|---|---|---|---|
| K1 | Rly, DPDT, 18V | 1313-0030 | Teledyne | 712Y-18 |

Schematic Diagram, page 3-139, Figure 32, Semi-Automatic Cal/BFO, 4600, change P1 pin 19 to +15V and at each relay remove pin 5 and its ground.

Serial number 317 and up

Schematic Diagram, page 3-123, Figure 30, Programmable IF, 4400, place a "+" polarity sign to the right side of C43, and on the component layout remove the "+" sign at the top of C43 and place it at the bottom of C43.

# TABLE OF CONTENTS


| | | Page |
|---|---|---|
| SECTION 1 | THEORY OF OPERATION | |
| | Introduction | 1-1 |
| | Circuit Reference Series | 1-1 |
| | Specifications | 1-1 |
| | Functional Description | 1-1 |
| | Circuit Description | 1-1 |
| | Input Circuits. 2100 | 1-1 |
| | Input Attenuators. 2500, 2600 | 1-7 |
| | Low Pass Filter and First Mixer. 3200 | 1-7 |
| | First I.F. and X4 Multiplier. 3300 | 1-7 |
| | Second I.F. and Mixer. 4300 | 1-8 |
| | Programmable I.F. 4400 | 1-8 |
| | Meter/Audio Amplifier. 4500 | 1-8 |
| | Frequency Synthesizer | 1-9 |
| | Low Frequency Phase Lock Loop. 3600 | 1-9 |
| | Offset Loop E | 1-9 |
| | Offset Loop D | 1-9 |
| | Summing Loop C | 1-9 |
| | High Frequency Phase Lock Loop. 3500 | 1-9 |
| | Offset Loop B | 1-10 |
| | Summing Loop A | 1-10 |
| | Programmable Dividers. 4200 | 1-11 |
| | Divide-by-P Divider | 1-11 |
| | Divide-by-M Divider | 1-11 |
| | Divide-by-N Divider | 1-12 |
| | Semi-Auto CAL/BFO. 4600 | 1-12 |
| | 10 MHz Reference Divider. 3400 | 1-12 |
| | Frequency Entry. 2300 | 1-13 |
| | Frequency and Level Display Multiplex. 2200 | 1-14 |
| | Attenuator and Gain Select. 2400 | 1-14 |
| | Shaft Encoder. 1200 | 1-14 |
| | Power Supply. 4700 | |
| SECTION 2 | MAINTENANCE | 2-1 |
| | General | 2-1 |
| | Performance Check | 2-1 |
| | Test Equipment Required | 2-1 |
| | Level Measurement Accuracy | 2-2 |
| | BFO Level and Frequency | 2-2 |
| | Bandwidth Check | 2-2 |
| | Return Loss, 75Ω | 2-3 |
| | Harmonic Distortion | 2-3 |
| | Noise Power Ratio (NPR) | 2-3 |
| | Phase Jitter | 2-3 |
| | Adjustment | 2-3 |
| | Time Base Adjustment | 2-4 |
| | Troubleshooting | 2-4 |
| | Troubleshooting Chart | |
| SECTION 3 | PARTS LISTS AND SCHEMATIC DIAGRAMS | 3-1 |
| | Parts Lists and Schematic Diagrams | |


TABLES


| Table No. | | Page |
|---|---|---|
| A | Model CE-70 Specifications | 1-3 |
| B | Printed Circuit Board Circuit Reference Number Cross Reference | 3-1 |

ILLUSTRATIONS


| Figure No. | | Page |
|---|---|---|
| 1 | Model CE-70 Frequency Selective Levelmeter | 1-2 |
| 2 | Model CE-70 Overall Block Diagram, Sheet 1 | 2-5 |
| 3 | Model CE-70 Overall Block Diagram, Sheet 2 | 2-7 |
| 4 | Model CE-70 Overall Block Diagram, Sheet 3 | 2-9 |
| 5 | Front Panel Interconnection Diagram, 1000, Sheet 1 | 3-3 |
| 6 | Front Panel Interconnection Diagram, 1000, Sheet 2 | 3-5 |
| 7 | Frequency and Level Display, 1100, Sheet 1 | 3-11 |
| 8 | Frequency and Level Display, 1100, Sheet 2 | 3-13 |
| 9 | Shaft Encoder | 3-15 |
| 10 | Digital Interconnection Diagram, 2000/2100, Sheet 1 | 3-19 |
| 11 | Digital Interconnection Diagram, 2000/2100, Sheet 2 | 3-21 |
| 12 | Frequency and Level Display Multiplex, 2200 | 3-25 |
| 13 | Frequency Entry, 2300 | 3-29 |
| 14 | Attenuator and Gain Select, 2400 | 3-33 |
| 15 | Decade Attenuator, 2500 | 3-37 |
| 16 | Units Attenuator, 2600 | 3-41 |
| 17 | Main Chassis Interconnection Diagram, 3000/3100, Sheet 1 | 3-45 |
| 18 | Main Chassis Interconnection Diagram, 4000/4100, Sheet 2 | 3-47 |
| 19 | Main Chassis Interconnection Diagram, 3000/4000, Sheet 3 | 3-49 |
| 20 | Low Pass Filter and First Mixer, 3200 | 3-55 |
| 21 | First I.F. and Times 4 Multiplier, 3300 | 3-61 |
| 22 | 10 MHz Reference/Divider, 3400 | 3-69 |
| 23 | High Frequency Phase Lock Loop, 3500, Sheet 1 | 3-79 |
| 24 | High Frequency Phase Lock Loop, 3500, Sheet 2 | 3-81 |
| 25 | Low Frequency Phase Lock Loop, 3600, Sheet 1 | 3-91 |
| 26 | Low Frequency Phase Lock Loop, 3600, Sheet 2 | 3-93 |
| 27 | Programmable Dividers, 4200 | 3-99 |
| 28 | Second I.F. and Mixer, 4300 | 3-107 |
| 29 | Programmable I.F., 4400 | 3-113 |
| 30 | Meter/Audio Amplifier, 4500 | 3-121 |
| 31 | Semi-Automatic CAL/BFO, 4600, Sheet 1 | 3-129 |
| 32 | Semi-Automatic CAL/BFO, 4600, Sheet 2 | 3-131 |
| 33 | Power Supply, 4700 | 3-135 |
| 34 | Rear Panel Interconnection Diagram, 5000 | 3-139 |

# SECTION 1
# THEORY OF OPERATION

## INTRODUCTION

1.01 In this section the Circuit Reference Series for circuit and component identification is explained, the overall functioning of the instrument is outlined and a description of the individual circuits is given.

## CIRCUIT REFERENCE SERIES

1.02 The circuits of the CE-70 are referred to by circuit reference numbers as follows: 1000-1200, Front Panel circuits; 2000-2600, Digital Control circuits; 3000-3600, R.F. Circuits and Synthesizer; 4000-4600, Programmable Divider, IF and Audio; 4700, Power Supply; and 5000, Rear Panel.

1.03 In each circuit the components are individually numbered. The complete identification for a component includes the circuit reference number. Thus the first resistor on 2nd IF and Mixer will be R4301, the third transistor Q4303, etc.

1.04 When the individual circuits are described in the Circuit Description section the component reference will be abbreviated. Only the circuit component number will be used, except when referring to a component in another circuit. In this case the full Circuit Reference Series number will be used.

1.05 Table B is a cross reference list of the P.C. board numbers and the Circuit Reference Series numbers. The P.C. board number is etched on each board. Each board may thus be identified. These numbers and also the assembly number will also be found in the Parts Lists.

## SPECIFICATIONS

1.06 The Specifications of the CE-70 Frequency Selective Levelmeter are given in Table A.

## FUNCTIONAL DESCRIPTION

1.07 The CE-70 Frequency Selective Levelmeter is a highly refined, triple conversion superheterodyne receiver capable of measuring frequency, noise, and signals over the range of 1 kHz to 25 MHz.

1.08 Frequency selection is controlled by digital Frequency Selector dials which may be set to the desired frequency with 10 Hz resolution. Continuous tuning in either 10 Hz, 100 Hz, or 1000 Hz steps is provided by the Search controls. Since the Local Oscillator frequencies are generated by a frequency synthesizer which is referenced to a very stable crystal oscillator, measurements are stable and drift is nearly eliminated.

1.09 The CE-70 has four switch selected input impedances, 75Ω, 124Ω, 135Ω, and 600Ω. As an option, 150Ω may replace the 124Ω input impedance. Bridging measurements can be made with the optional Model 701 Bridging Probe. Level measurements are done in either the TONE (+10 dBm to -90 dBm range) or NOISE (-10 dBm to -109 dBm range) mode. To this may be added the meter range of +2 dB to -20 dB. When the meter's EXPANDED scale is used, level readings can be resolved to .05 dB.

1.10 Calibration of the CE-70 can be performed without disturbing equipment frequency and level settings. When the CAL button is depressed all circuits are automatically placed in the Calibration mode at the frequency to which the CE-70 is tuned. The front panel CAL control is then set so the meter reads 0 dB. When the CAL button is again depressed, the calibrated circuits are ready to continue measurements.

1.11 A BFO output on the rear panel provides a 0 dBm signal into 75Ω impedance at the frequency to which the CE-70 is tuned. A RECORDER output, also on the rear panel, provides a 0.8 volt DC level for a 0 dB reading on the meter.

1.12 Audio demodulation of USB, LSB, or AM is selected by front panel switches. Audio output is available either through front panel phone jacks or an internally mounted speaker. The 3.1 kHz bandwidth (BW) should be used for checking the quality of demodulated voice communications.

## CIRCUIT DESCRIPTION

### Input Circuits. 2100

1.13 The 75Ω input circuit is connected directly to the Decades attenuator through the Impedance Selector switch, S2101-A. See Figure 10. In the case of 124Ω, 135Ω, 600Ω the input jacks are connected to a corresponding input transformer and then through the Impedance Selector switch to the Decades attenuator. In the unselected position of the Impedance Selector switch a 75Ω resistor is connected across the transformers or the 75Ω input jack so that lines plugged into these jacks will be terminated when not selected.

### Input Attenuators. 2500, 2600

1.14 The Decades Attenuator is made up of four attenuators, one 10 dB, two 20 dB and one 30 dB. The attenuators are selected by the front panel decade control through relay operated switches to provide a maximum of 80 dB. See Figure 15. Also included in this circuit is a relay operated switch which terminates the input line with 75Ω, connects the -40 dBm calibration signal to the input and switches in the 30 dB attenuator in the Decades Attenuator and 9 dB in the Units Attenuator in the CAL mode. The reason for this value of attenuation is that in the tone mode, with zero attenuation switched in and an extra 10 dB of gain in the I.F.

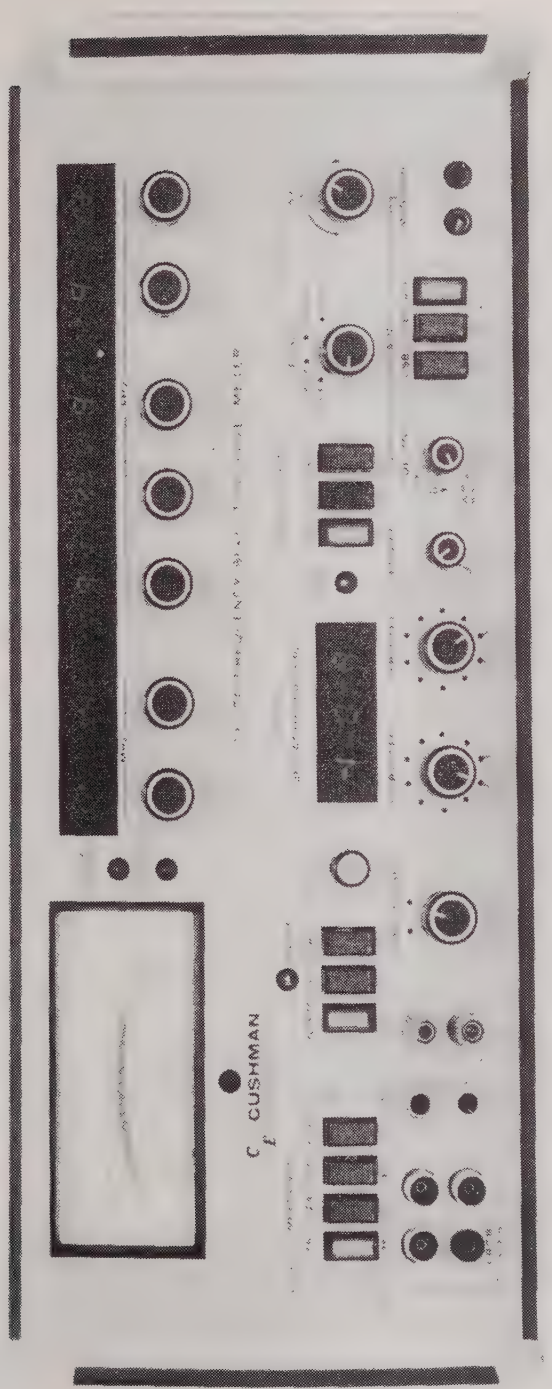


Figure 1. Model CE-70 Frequency Selective Levelmeter

(600 ohm jacks shown in photo is original configuration. See Figure 2 in Operation Manual for later arrangement using a single W. E. 310 jack.)

TABLE A. Model CE-70 Specifications

| ITEM | CHARACTERISTICS |
|---|---|
| FREQUENCY | |
| Range | |
| 75Ω | 1 kHz to 25 MHz |
| 124Ω | 60 kHz to 11.5 MHz |
| 135Ω | 10 kHz to 3.2 MHz |
| 150Ω (Optional) | 10 kHz to 5 MHz |
| 600Ω | 1 kHz to 650 kHz |
| Accuracy | |
| 20° to 30°C | ± 20 Hz ±1 PPM |
| 0° to 50°C | ± 25 Hz ±2 PPM |
| Aging Error | < 5 PPM/year |
| Modes of Operation | Fixed Tune, 7 multi-turn switches Search, up or down from dialed-in frequency in 10, 100, or 1000 Hz steps. |
| Resolution | |
| Fixed Tune Mode | ±10 Hz |
| Search Mode | 10 Hz, 100 Hz, 1 kHz |
| Display | 7 digit red L. E. D. |
| LEVEL | |
| Range (ref. to 0 dB on meter) | -109 to +10 dBm |
| Display | 3 digit L. E. D. |
| Accuracy, After Level Calibration, 75Ω (ref. to 0 dB on meter) | |
| Tone Mode, 25°C ±5°C | |
| 75 Hz Bandwidth | |
| 10 kHz to 18.6 MHz | |
| -69 to +10 dBm | ±0.15 dB |
| -89 to -69 dBm | ±0.20 dB |
| 18.6 MHz to 25 MHz | |
| -69 to +10 dBm | ±0.25 dB |
| -89 to -69 dBm | ±0.30 dB |
| 1 kHz to 10 kHz | |
| -69 to +10 dBm | ±0.30 dB |
| -89 to -69 dBm | ±0.70 dB |
| 1.74 kHz Bandwidth, and 3.1 kHz Bandwidth | |
| 10 kHz to 25 MHz | ±0.05 dB add'l |
| Tone Mode, 0°C to +55°C | ±0.10 dB add'l |
| Noise Mode, 25°C ±5°C | |
| 75 Hz Bandwidth | |
| 100 kHz to 18.6 MHz | |
| -99 to -10 dBm | ±0.25 dB |
| -109 to -99 dBm | ±0.35 dB |
| 18.6 MHz to 25 MHz | |
| -99 to -10 dBm | ±0.30 dB |
| -109 to -99 dBm | ±0.50 dB |
| 10 kHz to 100 kHz | |
| -99 to -10 dBm | ±0.40 dB |
| -109 to -99 dBm | ±0.9 dB |

TABLE A. Model CE-70 Specifications

| ITEM | CHARACTERISTICS |
|---|---|
| 1.74 kHz Bandwidth; 3.1 kHz Bandwidth | |
| 10 kHz to 25 MHz | ±0.10 dB add'l |
| Noise Mode, 0°C to ±55C | ±0.10 dB add'l |
| Accuracy: 124, 135, 600Ω | |
| 25°C ±5°C | ±0.10 dB add'l to 75Ω |
| 0°C to ±55°C | ±0.15 dB add'l to 75Ω |
| Accuracy: 150Ω (Optional) | |
| 25°C to ±5°C | ±0.15 dB add'l to 75Ω |
| 0°C to ±55°C | ±0.20 dB add'l to 75Ω |
| Digital Resolution | 1 dB and 10 dB steps |
| Analog Meter | |
| Normal Mode | -20 dB to +2 dB |
| Expand Mode | -1 dB to +1 dB |
| Resolution | ±0.05 dB |
| Linearity Error | |
| Expand, +1 dB to -1 dB | ±0.02 dB |
| Normal Mode | |
| +2 to -10 dB | ±0.1 dB |
| -10 to -15 dB | ±0.5 dB |
| -15 to -20 dB | ±0.7 dB |
| Calibrate - Push to CAL button | CAL adjust automatically calibrates at at selected frequency |
| INPUT | |
| Impedance | |
| Unbalanced | 75Ω |
| Balanced | |
| Standard Unit | 124Ω, 135Ω, 600Ω |
| Optional Unit | 135Ω, 150Ω, 600Ω |
| Return Loss, 75Ω | |
| Tone Mode | |
| -79 to +10 dBm | ≥30 dB |
| -89 to -79 dBm | ≥20 dB |
| Noise Mode | |
| -89 to -10 dBm | ≥30 dB |
| -99 to -89 dBm | ≥20 dB |
| Return Loss, 124, 135, 600, 150Ω (Optional) | |
| Tone Mode | |
| -79 to +10 dBm | ≥30 dB, except for 1st octave of frequency range<br>≥27 dB, including 1st octave of frequency range |
| -89 to -79 dBm | ≥20 dB |
| Noise Mode | |
| -89 to -10 dBm | ≥30 dB, except for 1st octave of frequency range<br>≥27 dB, including 1st octave of frequency range |
| -99 to -89 dBm | ≥20 dB |

TABLE A. Model CE-70 Specifications (cont.)

| ITEM | CHARACTERISTICS |
|---|---|
| Common Mode Rejection: 124, 135, 600, 150Ω (Optional) | 30 dB nominal |
| Input Protection | ±60V DC, 1 ms transient |
| Overload Indicator<br>Display for 1800 Channel Noise Input | |
| Tone Mode | 25 dB per channel overdrive, typical |
| Noise Mode | 45 dB per channel overdrive, typical |
| Signal Presence Indicator | Displays for -8 dB on meter |
| BANDWIDTH | |
| 75 Hz | |
| 3 dB | 75 Hz ±10% |
| 60 dB | <350 Hz |
| 1.74 kHz (Equiv. Noise Bandwidth) | |
| 3 dB | 2.3 kHz ±10% |
| 60 dB | <4.6 kHz |
| 3.1 kHz | |
| 3 dB | 3.1 kHz ±10% |
| 60 dB | <6.2 kHz |
| INTERNAL DISTORTION, NOISE MODE (10 kHz to 25 MHz) | |
| Harmonic | |
| For 60 dB Sensitivity Increase | >75 dB below fundamental |
| Noise Power Ratio | |
| Equivalent 1800 Channel System with Stop Band Slot at 8.002 MHz or 2.438 MHz, for 40 dB Sensitivity Increase | 54 dB min.(56 dB typical) |
| Equivalent 600 Channel System with Stop Band Slot at 2.438 MHz, for 40 dB Sensitivity Increase | 56 dB min. (58 dB typical) |
| INTERMEDIATE FREQUENCIES | |
| IF 1 | 50.7 MHz |
| IF 2 | 10.7 MHz |
| IF 3 | 80 kHz |
| IF REJECTION | |
| 1 kHz to 100 kHz | >70 dB |
| 100 kHz to 25 MHz | >80 dB |
| IMAGE REJECTION | >80 dB |
| AUDIO OUTPUT | |
| Demodulation | AM<br>USB, LSB (Offset by 2.0 kHz from IF) |
| Monitor Output | |
| Level | 0 dBm nominal into 600Ω for 0 dB on meter |
| Residual Phase Jitter (CE-70 Tuned from 100 kHz to 25 MHz) | |
| Tone Mode, for signals >-69 dBm, 20 Hz to 300 Hz away from carrier, for 5 dB overdrive on meter | 0.5° P-P nominal |
| Harmonic Distortion, 1 kHz tone | 5% maximum |
| Speaker Output - variable | 100 mw maximum |

TABLE A. Model CE-70 Specifications (cont.)

| ITEM | CHARACTERISTICS |
|---|---|
| RECORDER OUTPUT | |
| Level | 0.8 Volts DC, typical into 1KΩ for 0 dB on meter |
| Connector (Rear panel) | BNC |
| BFO OUTPUT | |
| Level | |
| 10 kHz to 25 MHz | 0 dBm ±0.2 dB into 75Ω |
| 1 kHz to 10 kHz | 0 dBm ±0.25 dB into 75Ω |
| Connector (Rear Panel) | BNC |
| TIME BASE OUTPUT (Rear Connector BB) | |
| Frequency | 10.000000 MHz |
| Level | -10 dBm ±4 dB into 50Ω |
| Connector | BNC |
| FIRST LOCAL OSCILLATOR OUTPUTS (Rear Connector AA and CC) | |
| Frequency | 50.7 to 75.7 MHz |
| Level | -10 dBm ±2 dB into 50Ω |
| Connector | BNC |
| THIRD IF OUTPUT (Rear Connector D) | |
| Frequency | 80 kHz |
| Level | -50 dBm ±2 dB into 600Ω |
| Connector | BNC |
| PROBE POWER (Front Panel) | +15V DC, 50mA maximum |
| POWER REQUIREMENTS | 115V ±10% (230V ±10% Optional) 50 to 60 Hz, 100 VA nominal |
| DIMENSIONS | 7 3/4" (19.7cm) H x 17 3/4" (45.1 cm) W x 22" (55.9 cm) D |
| WEIGHT | 50 lbs (22.7 kg) |
| ENVIRONMENTAL | |
| Temperature, Operating Storage | 0°C to +55°C<br>-40°C to +75°C |

mplifier, the input sensitivity is -89 dBm. It llows then that with the extra gain in the I. F. reduced to zero it will require 39 dB of attenuation for a -40 dBm level to the input.

1.15 The Units Attenuator, Figure 16, is made up of one 1 dB, one 2 dB and two 3 dB attenuators, which are selected by the front panel Units Level control and operated by relay operated switches to select the desired attenuation.

Lowpass Filter and First Mixer. 3200

1.16 This circuit receives the 1 kHz-25 MHz signal from the input, mixes it with the 50.7-75.7 MHz L.O. to produce the 50.7 MHz I.F. signal. It also contains the 10 dB wideband amplifier and the Overload Indicator circuits. The 1 kHz-25 MHz signal from the Units Attenuator enters at J4, see Figure 20, through the overload protector, CR2, CR3, to the +10 dB Wideband Amplifier relay operated switch, K1. It either passes through this amplifier, Q5, Q6, in the -100 to -109 dBm settings of the LEVEL controls in the Noise mode, or is bypassed to the input lowpass filter L5, L6, L7, L8, C22-C30 in all other LEVEL Control settings. The relay switch and the Wideband Amplifier are energized by the +10 dB Wideband Amplifier Control Circuit, Q9, Q10.

1.17 The 50.7-75.7 MHz 1st L.O., either from the frequency synthesizer circuits, 3500, 3600, or from the CE-71 synthesizer enters through to the 50.7 MHz Highpass filter, C5-C9, L1, L2, buffer, Q1, and L.O. Driver, Q2, Q3, to the impedance matching inductor, T1. One path of the signal is through buffer attenuator, Q4, which supplies a -10 dBm signal to the Semi-Auto CAL/BFO Circuit, 4600.

1.18 The signal from T1 also travels through R11 to the 1st Mixer, Z1, where it is combined with the 1 kHz-25 MHz input signal to produce the 50.7 MHz I. F. Amplifier signal. The IF signal passes through I.F. Amplifier, Q7, buffer amplifier, Q8, and the output Lowpass filter C55, C58, C60, C61, C64, L11, L13, to the First IF and X4 multiplier.

1.19 The Input 1 kHz-25 MHz signal also goes to the 30 dB Amplifier, Q11, Q12, Q13, Q14, to the detector-doubler CR4, CR5, and to the comparator U1. When a 50 dB overload occurs in the input circuits, U1 switches on the Overload indicator light.

First I. F. and X4 Multiplier. 3300

1.20 In this circuit the 50.7 First I. F. is mixed with the 40 MHz second L.O. to produce the 10.7 MHz second I. F. The 50.7 MHz IF from the 3200 circuit enters through J1 to the 50.7 MHz IF Amplifier, Q1, through crystal bandpass filter, Y1, through buffer amplifier Q2, Q3, and the following 52.6 MHz lowpass filter to the second mixer, Z1. e Figure 21. Circuit temperature compensation provided by thermistor, R8.

1.21 10 MHz from the Reference Divider Circuit 3400, enters through J2 at -10 dBm, to buffer amplifier, Q4, X4 multiplier, Q5, Q6, through the following 40 MHz bandpass filter and buffer, Q7, through the 40 MHz L.O. Driver, Q8, Q9, Q10 to the Second Mixer, Z1, where it combines with the 50.7 MHz IF to produce the 10.7 MHz second IF. The 10.7 MHz output passes through Output Lowpass filter, C23-C26, C28, L5, L6, to the Second IF and Mixer Circuit 4300.

Second I. F. and Mixer, 4300

1.22 This circuit contains the second I. F. Amplifier, the 2.3 kHz, 3.1 kHz, and 45 kHz I. F. filters, the 10.62 MHz phaselock VCO third L.O. and the third mixer which produces the 80 kHz third I. F. The 10.7 MHz from the Second Mixer enters through J2 and impedance matching transformer T5, and goes to the second I. F. amplifier, Q18. Thermistor R74 furnishes temperature compensation. From the second I. F. amplifier the signal goes to the Bandpass Filters, 2.3 kHz, 3.1 kHz, and 45 kHz. See Figure 29. Filter selection is accomplished by the Bandwidth Switching circuit, Q16, Q17, and Q22. This switching circuit is operated by the front panel Bandwidth switch controls. From the Bandpass Filters the signal goes to buffer amplifier, Q14, to the third mixer, T3, T4, CR8-CR11, where it is mixed with a 10.62 kHz signal to produce the 80 kHz third I. F. This signal passes to the Programmable I. F. circuit through the Output Lowpass Filter, L14, L15, and C92-C99.

1.23 The 10.62 MHz third L.O. is generated by a VCO in a phaselock circuit referenced to 10 MHz from the crystal controlled Reference Divider Circuit, 3400.

1.24 The 10.62 MHz output of the VCO, L2, CR1, Q5 is buffered through Q7 to the third mixer driver, Q15 and also to the phaselock loop mixer T1, T2, CR2-CR5 driver, Q6. The other input to the phaselock loop mixer is 10 MHz reference from the Ref/Divider Circuit, 3400, which enters through J1.

1.25 The 620 kHz output of the phaselock mixer passes through a lowpass filter, L6, L7, C-54-58 to buffer amplifier Q11, through additional amplifiers, Q9, Q10 to the logic level driver, Q8. The logic signal goes to the ÷62 circuit made up of U2, U3, U4. The 10 kHz output is then applied to the phase detector, U5, where it is compared with a reference 10 kHz frequency from the Ref./Divider.

1.26 The DC output of the phase detector is amplified by operational amplifier, U6 and applied to a twin-T notch filter to remove any 10 kHz components and then through an active lowpass filter Q2, Q3, Q4. This DC error voltage is then applied to the Varicap, CR1, to maintain the VCO output at 10.62 MHz.

1.27 Power to the circuit is regulated by the

board regulator, U1, to provide for stable operation of the circuits.

Programmable I. F. 4400

1.28 This circuit contains the 75 Hz and a 15 kHz I. F. filter, the 80 kHz I. F. Amplifer and the two programmable I. F. amplifers. See Figure 30. The 80 kHz I. F. signal enter through J1 to the 80 kHz Bandpass filter L1, L2, C5, C6, C7, to either the 75 Hz crystal filter, Y1, with switch controlled crystal filter matching amplifiers, Q1, Q3, or to the 15 kHz filter amplifer Q2, Q5, each of which is controlled by the Bandwidth switching circuit, Q4, Q15, Q16, Q17, Q18. The calibrating gain adjustment for the 75 Hz filter is R6, and for the 15 kHz filter is R12. A control circuit from the CE-71 to the base of Q15 overrides the bandwidth switching both here and on the 4300 board, to switch in the 15 kHz filter in the 4400 board and the 45 kHz filter in the 4300 board whenever a ground closure is received from the CE-71.

1.29 Output from the filters is amplified in the tuned amplifier/buffer Q6, Q7. The gain of Q6 is controlled by the Gain Compensation switches Q19, Q21, Q22 for input impedances other than 75Ω. The individual impedance calibrating controls are: R78 for 600Ω, R81 for 135Ω and R84 for 124/150Ω. When the CE-70 is placed in the CAL mode the switches, Q24, Q25, Q26, override the impedance switch settings to set the Q6 gain for 75Ω.

1.30 The programmable 10/20 dB Amplifier, Q8, Q9, Q10, is controlled through the switch, Q20, which is turned on at LEVEL readouts on the LED of -70 dBm and below in the TONE mode. The calibrating adjustment is R44. The 10/30 dB amplifier, Q11, Q12, Q13, Q14, is controlled through switch, Q23, and is turned on in the NOISE mode. The calibrating adjustment for this amplifier is R56.

Meter/Audio Amplifier. 4500

1.31 This circuit contains the 80 kHz IF, audio detector, meter control and amplifier circuits, the carrier reinsertion oscillators for SSB demodulation and the audio amplifier. Refer to Figure 31.

1.32 Input from the third mixer is through P1-10 to the 80 kHz IF amplifier, Q5, Q6, Q7. Power to this amplifier is obtained through Q2, Q4 which are controlled by Q1. When used with a Spectrum Display, Q2, Q4, are switched off to prevent continuous maximum meter excursion while the signal is being swept.

1.33 Output from the IF Amplifier passes through Detector U2, CR4, CR5. The demodulated signal, detected by CR5 for the audio output, is amplifier by Q3 and then goes to the Audio Output Amplifier U3, Q11, Q12 through the front panel volume control.

1.34 For Single Sideband reception the signal goes from the IF Amplifier, Q7, to the mixer U1. Output from either reinsertion oscillator, Q9 or Q10 as selected by the front panel audio control switch is buffered by Q8 to the mixer, U1, where the SSB is demodulated and passed through the front panel volume control to the audio output circuits.

1.35 Detector output from CR4 for the meter circuits goes to summing amplifier, U4 to the Signal Presence comparator/driver U6, Q25, and also through the switch, Q23 to voltage follower buffer, U5 to the three output circuits; Recorder output and the Normal and Expanded outputs to the meter. The gain of U4 is controlled by the front panel CAL control and Vernier Level Control. Both of these controls are in the feedback circuit of U4.

1.36 When the Vernier Level Control is turned out of the detent position a switch turns on Q13 to energize the UNCAL light indicator for this circuit. The Vernier Level Control will then adjust the gain of U4. When the Push-to-Cal switch is depressed, Q14 is turned on to disable Q13 and Q15, Q16 cause Q17 to conduct, effectively shorting out the Vernier Level control, leaving only the CAL control to adjust the level of U4, which may then be set for 0 dB on the meter.

1.37 The Meter Damping circuit, a long time constant network, R87, C45 is switched in and out of the circuit by Q18, Q20, Q22, Q24. In the TONE mode from +10 to -69 dBm, switch Q20 is open so R87 is in the circuit. Between -70 and -89 dBm in TONE and in all levels in NOISE Q20 conducts and thus shorts out R87 to give a fast response to the meter circuit.

1.38 The gate, Q23, operated by Q19, Q21 and controlled from the 100 Hz up/down counter-one shot circuit in the Frequency entry circuit, opens the circuit momentarily when the frequency count goes from 00 to 99 or vice versa, to prevent a transient to the meter. The meter reading is held constant during this instant by the charge on C45.

1.39 The gain of the Signal Presence light amplifier, U6, is set so that a signal greater than -8dB, referred to Meter 0dB, will cause the light to turn on. U9 is a voltage follower with unity gain providing 0.8 volt across 1000Ω for meter 0 dB at the Recorder output connector. U7 provides unity gain to the meter in the NORM mode and U8 provides the gain necessary for a full scale meter reading of ± 1dB in the EXP mode. EXP zero, EXP gain and EXP reference are adjusted by R113, R111, R118 respectively.

Frequency Synthesizer

1.40 The Frequency Synthesizer is made up of the High Frequency Phase Lock Loop, 3500, the Low Frequency Phase Lock Loop, 3600, and the Programmable Divider, 4200. The Programmable Divider is controlled by the Frequency Entry circuits, 2300, which in turn is controlled by the Front Panel Frequency Digital Dial switches. See Block Diagram Figure 3.

1.41 The First L.O. frequency is generated in the synthesizer circuit which consists of three offset phase lock loops, two summing phase lock loops and three divide circuits in the Programmable Divider, the division ratios of which are determined by the setting of the Front Panel Frequency Selector rotary digital switches. The divide by P ratio is set by the 10 and 100 digit switches, the divide by M by the 1 kHz and 10 kHz digit switches and the divide by N by the 100 kHz, 1MHz and 10 MHz digit switches.

1.42 The Offset Phase Lock Loops (PLL) are made up of a Voltage Controlled Oscillator (VCO) a Mixer and a Phase Detector. The VCO output is mixed with an accurate fixed frequency from the 10 MHz Ref/Divider Circuit, the output frequency is divided down to a fixed output of 1 kHz, 10 kHz or 100 kHz by the Programmable Divider where it is compared with a signal from the 10 MHz Ref/Divider, of the same frequency, in the Phase Detector. Phase Detector output is DC, which controls the VCO. Thus each offset Loop VCO is controlled by the Front Panel Frequency Selector switches and is compared to the Reference Frequencies.

1.43 The two summing phase lock loops, also made up of a VCO, Mixer and Phase Detector, combine the outputs of the Offset PLL's to generate an L.O. which is directly compared to frequencies derived from the 10 MHz Temperature Compensated Crystal Oscillator (TCXO). In this way each frequency dialed up is directly related to the TCXO accuracy.

Low Frequency Phase Lock Loop. 3600

Offset Loop E

1.44 This loop is controlled by the setting of the 10 and 100 Hz Frequency Selector dials which control the ÷P ratio. The VCO in this loop (E), covers a frequency range of 10.1995 to 10.1005 MHz or 99 kHz. Q21, CR10, CR11, L15 make up this VCO. See Figure 26. VCO output goes to the Directional Coupler, T3, to VCO buffer, Q23, to the Mixer T5, T6, CR13-16.

1.45 The other input to the mixer is the 10 MHz reference signal which enters through J1 to Power Splitter T7, to 10 MHz Amplifier Q29 and then to Mixer Transformer, T6. Mixer output, 199.5 to 100.5 kHz then passes through the 5 MHz LP Filter, L18, L19, C90-C92, to output Amplifier Q28, Q34 and out through P2-4 to the ÷P circuit.

1.46 Output from the ÷P circuit returns through P2-8. The frequency will be 1 kHz when the VCO frequency is correct. This frequency passes through driver Q32 to Phase Detector, U11. The other input to U11 is the 1 kHz Reference frequency. If the ÷P frequency differs from the 1 kHz reference frequency a DC output will be produced by U11, the polarity depending on the direction in which the frequencies differ. This output is amplified by U10 passed through the 1 kHz notch filter, C107-C110, R143, R164 to remove 1 kHz components and through active 500 Hz and 700 Hz low pass filters, Q24, Q25, Q27 to remove other AC components and then to the VCO Varicaps CR10, CR11.

1.47 The other VCO output through directional coupler, T3, is buffered through Q22 and Q26 to the ÷100 counter-divider, U8, U9, to produce a 101.995 to 101.005 kHz output to summing Loop C Phase Detector. The other 10 MHz output from power splitter, T7, goes to the Mixer in Loop D as a reference frequency.

Offset Loop D.

1.48 This VCO, Q10, L13, CR8, CR9 produces a frequency of 14.98-13.99 MHz which is buffered through Q11, Q12 to the Mixer, T1, T2 CR4-CR7. See Figure 25. The other input to the mixer is the reference 10 MHz from the power splitter, T7 (Figure 26). Mixer output of 4.98-3.99 MHz goes through the 7 MHz Low Pass Filter C28-C32, L11, L12 to output amplifier, Q7, Q8, to the ÷M circuit through P2-19. The 10 kHz output from ÷M enters through P2-21 to driver, Q20, and to the phase detector U7. The other input to the phase detector is the reference 10 kHz frequency through P1-11 and driver, Q19, to phase detector U7.

1.49 Another output from the VCO is taken through Q11, Q13 to a ÷10 counter-divider U5. The 1.498-1.399 MHz output is applied to the mixer in summing loop C.

Summing Loop C

1.50 Loop C VCO, Q1, Q2, L7, CR1, CR2, 1,599.995 to 1,500.005 kHz output if buffered through Q3, Q4, Q5. Output from Q5 is applied to Mixer, U3, the other input being the 1.498-1.399 MHz from Loop D. Mixer output of 101.995 to 101.005 kHz passes through 200 kHz LP Filter L9, L10, C20-C22 and is buffered through Q6, amplified by Q18 and applied to phase detector, U4. The other input to U4 is the 101.995 to 101.005 kHz from Loop E. Any error voltage developed in the phase detector, U4, is amplied by U2 and applied to the VCO Varicaps CR1, CR2. The other VCO 1,599.995 to 1,500.005 kHz output through buffer, Q4, is fed to Loop A in the High Frequency PLL circuit through J2.

1.51 The +5 volt supply for the integrated circuits is supplied through the board regulator U1. The -15V and +15V supplied are divided into three circuits and decoupled by C1, L1, L2, L3 and C2, L4, L5, L6 respectively.

High Frequency Phase Lock Loop. 3500

Offset Loop B

1.52 VCO3, Q24, CR12, L17, 52.3-62.3 MHz and VCO4, Q27, CR13, L19, 62.3-77.3 MHz cover the frequency range of this loop. See Figure 24. Q28 is the output buffer for VCO3 and

Q29 is the buffer for VCO4. VCO3 is used for CE-70 input frequencies of 0-9.9999 MHz and VCO4 for 10-25 MHz. The VCO's are controlled by the outputs of the 1MHz and 10 MHz UP/DOWN counters in the Frequency Entry circuit (2300).

1.53 Switching logic is on the 3500 board. CR8, CR9, Q18, Q20 sense whether the dialed up frequency is above or below 10 MHz. Output of Q20 goes high for 10 MHz and above and turns on VCO4 through switch, Q26, and turns off VCO3 through Q23, Q25. When the dialed in frequency is below 10 MHz VCO3 is switched on and VCO4 is switched off. This logic is controlled by the QA and QB output of U2302.

1.54 The wide frequency range, 25 MHz, which VCO3 and VCO4 must cover requires an adjustment in loop gain of the phase lock loop circuitry. This is accomplished by changing the feedback resistance of the Loop Amplifier, U5. Q31 Q32, Q33 are the switches that controls the feedback resistance. R91 is switched in for 0-3.9999 MHz, R92 for 4-9.9999 MHz and R160 and 10-25 MHz.

1.55 When VCO4 is on (10-25 MHz is in use) the output of Q37 goes high to remove the negative voltage from Q33 to turn it on, placing R160 in the U5 feedback loop. When VCO3 is in use the Qc, Qd outputs of the UP/DOWN counter U2305 control the choice of R91, 0-3.9999 MHz or R92,4-9.9999 MHz. This is accomplished through VCO Switching Circuit, CR10, CR11, Q21, Q22, NAND gate CR14, CR15, and switch circuit, Q35, Q36, Q38, CR21. CR16, CR17, CR18 are isolating diodes. CR19 and CR20 gives Q35 and Q36 switches additional noise immunity.

1.56 Output from either VCO goes to the Power Splitter, R140-142, C94, C95, T4, through WT3 to Loop A. The other output from the Power Splitter goes to Mixer Driver, Q40 and to one input of the mixer T5, T6, CR22-25. The other input to the Mixer is the 50 MHz reference frequency from Reference/Divider, 3400. The 50 MHz is amplified by Q41, Q42, Q43 and applied to the Mixer through Impedance Matching Network L25, C106.

1.57 Mixer output, 2.3-27.3 MHz, goes to the divide-by-N circuit, 4200, through attenuator R147-R149 and low pass filter, L23, L24, C107-C111 through J4, where it is divided down to 100 kHz and returns to the 3500 board through J7, pin 17. This 100 kHz signal is amplified by Q17 and applied to the Phase Detector, U4. The other input to the phase detector is 100 kHz from the Reference Divider, 3400 through amplifier Q19. Phase Detector output is amplified by Loop Amplifier, U5, the gain of which is controlled as discussed above. Also around U5 is a Latch Detector to prevent the phase lock loop from latching up in an unlock mode of operation.

1.58 Loop Amplifier output passes through a 67 kHz L. P. Filter C67-69, L14-16, C70-73 to output buffer Q39 and through WT1 to Loop A as a steering voltage to VCO1, VCO2. The output of the filter also is fed back to the VCO3-4 Control line to the Varicap CR12, CR13 to complete the phase lock loop circuit.

Summing Loop A.

1.59 This loop combines the output of Summing Loop C and Offset Loop B to provide the First L.O. Output of 50,701.005 to 75,700.005 kHz adjustable in 19 Hz steps. Figure 23.

1.60 VCO1, Q15, CR7, L9, covers the range of 50,701.005 to 60,700.005 kHz for the Frequency Entry settings of 0-9.9999 MHz. VCO2, Q14, CR6, L10 covers the range of 60,700.005 to 75,700.005 kHz for the Frequency Entry setting of 10-25 MHz. Outputs are buffered by Q10, Q12, and the VCO's are enabled by switches Q11, Q13 which are controlled by VCO switching circuit, CR8, CR9, Q18, in Figure 24 and described in paragraph 1.53.

1.60 The 50,701.005 to 75,700.005 kHz VCO1 & 2 output passes through the Directional Coupler, R41-43, C34, C36, T3, to the output buffers Q8, Q16 and through J1 and J2 to the First Mixer or Spectrum Display.

1.62 The second output of the Directional Coupler goes through Driver Amplifier, Q9, to the Mixer T1, T2, CR2-5. The other input to the Mixer is the 52.3-77.3 MHz output of Loop B through the 20 dB Attenuator R32-34. The 1,599.995 to 1,500.005 kHz Mixer output passes through the attenuator network R35-R37 to the 6.3 MHz Low Pass Filter, L5, L6, C10, C11, C15, to IF amplifier, Q4, Q5, buffer, Q6, to the Phase Detector, U2.

1.63 The other input to the Phase Detector is the 1,599.995 to 1,500.005 kHz output from Summing Loop C in the Low Frequency PLL circuit through buffer amplifier, Q7. Output from the Phase Detector goes to the Loop Amplifier, U1. U1 is protected from lock-up by Latch Detector, Q2, Q3, and provides closed loop compensation with the RC feedback impedance, R12, C16. Output from U1 then goes through the active Low Pass filter circuit of Q1 to provide the control voltage for VCO1 & 2. The Steering Voltage from Loop B is filtered by Low Pass filter C5-7, C9, L3, L4 and combines with the VCO control voltage from Q1 to provide the full VCO1, VCO2 control. Thus the 50.701.005 to 75,700.005 kHz L.O. is referred to the Crystal Oscillator standard and made adjustable over its full 0-25 MHz range in 10 Hz steps.

Programmable Dividers. 4200

1.64 Three programmable dividers are used to cover the frequency range of the CE-70. The divide-by-P covers the tens and hundreds digits, divide-by-M covers the thousands and ten thousands digits and divide-by-N covers the hundred thousands, millions and ten millions digits. The purpose of each divider is to divide the output frequency of a mixer, where the VCO output has been mixed with a reference frequency, by a number, determined by the

setting of the Front Panel Frequency dials, so that the divided frequency output will be equal to a reference frequency. This output frequency, 1 kHz for P, 10 kHz for M and 100 kHz for N, to be compared in a Phase Detector with a Reference of the same frequency in order to generate an error control voltage for the VCO to phase lock the VCO on frequency, and thus maintain a zero frequency error. In this way the VCO frequency is controlled by the Frequency dial settings, since the VCO frequency must change each time the dials are reset in order for the divided frequency to the phase detector to be exactly equal to the reference frequency to the phase detector.

Divide-by-P Divider.

1.65 The VCO of the E Offset Loop, to which the P Divider is connected has a frequency range of 10.1995 to 10.1005 MHz, which when mixed with the 10 MHz Reference produces a frequency ranging from 199.5 to 100.5 kHz. This frequency is applied to the input of the P divider. It must always be divided by a number that will produce a 1 kHz output. See Block Diagram Figure 3.

1.66 Input to the P divider is through amplifier/buffer Q4, Q5, Q6, to the positive/negative clock select circuit, U23. This circuit selects either the positive or negative going pulse as the clock to U12, positive direct through U23-5,6 or negative inverted through U23-2,3,11,12, to provide a half count delay whenever U14-12,13 changes state. This takes place whenever the negative going output pulse from U14-9 occurs. This produces a 5 Hz offset and makes the first L.O. range to be 50,700.005 to 75,700.005 kHz as already noted.

1.67 If, for instance, the dialed up frequency were .25 Mhz, the divider input frequency would have to be 199.5 kHz-25 kHz = 174.5 kHz. To produce a 1 kHz output the output must be divided by 174.5. To produce 100.9-25 = 174.5 a tens complement method is used. In this case the number 25 from the frequency dials is loaded into the up-counters U11, U12. See Figure 27. A load pulse is generated by U14. The counters than count up from 25 to 00 at the rate of the input frequency, and then start over. The J-K F/F U14-9 changes state at the 75th count from U11-U12 to produce an output pulse but no load pulse. The counters now count from 00 to 99 to 00 and generate a load pulse (at the 99.5 count) which loads 25 again and the cycle repeats. The total count for a cycle is then 75 + 99.5 = 174.5. For each 174.5 count one output pulse is generated, thus dividing the input frequency by 174.5. When the VCO has shifted to the correct frequency due to the Phase Detector error voltage the loop is locked on frequency until the Frequency dials are changed.

Divide-by-M Divider

1.68 For the M divider the procedure is similar but with additional operations and no frequency offset. The M divisor in this case is 498 minus the dialed in number, consisting of the thousands and ten thousands digits. 498 is divided into its parts 98 and 400. The tens complement of 98 is 902 which is loaded into the counters U17-U19 to obtain the tens complement out, or a count of 98.

1.69 The Load Pulser circuits of U15-4, 5, 6 and U16-1, 2, 3 and the Data Select circuit of U16-11,13 combine to load "9" into U17, inhibit loading of U18 and allows "2" to be loaded into U19. The low on U15-2, 10, 13 inhibits input data through the Data Select circuits. When the counters reach the 999 state, the look ahead logic, U13, enables the Overflow Detector, U20. The detector changes state on the next count (overflow state of 1000) to generate another load pulse. This time 6 is loaded into U17 and the input data from the front panel Frequency Selector switches is loaded into U18, U19. The loaded number is 600 (tens complement of 400) plus the dialed frequency. The counter now counts to 1000 which results in the tens complement of the number, or 400 minus the dialed frequency. The total count is then 98 plus 400 minus the dialed frequency.

1.70 For example the desired number M equals fixed number, $M_f$ = 498, minus the variable number from the front panel, $M_V$. $M = M_f - M_V$. If the variable number is $M_V$ = 13 (13 kHz), M = 498 -13 = 485. The count as described above is 1000-902 = 98 plus 1000 - (600 + $M_V$) = 1000 -613 = 387, so M is 98 + 387 = 485.

1.71 Input to the divider from Loop D mixer is through input Amplifier, Q1, Q2 and buffer, Q3. U16-8, 9, 10 is a wave shaper-driver to provide logic level signals to the dividers. U16-4, 5, 6 is the output buffer.

Divide-By-N Divider

1.72 In the N divider the divisor N is equal to the fixed frequency, 23, plus the variable frequency, 0-259, set in by the Frequency dials. Thus the Mixer output of 2.3 MHz -28.2 MHz from the B Offset loop is divided by any number 23-282 to provide the required 100 kHz output to the loop phase detector.

1.73 The setting of the 100 kHz, 1 MHz, dials is loaded into the up-counters U7, U8 as a nines complement number. The 10 MHz dial is loaded into U9 as a threes complement number. Complementing of the Frequency dial settings is accomplished with the logic network of U1, U2, U4 and part of U3, U5, U6.

1.74 When the counter is counted up to overflow (U9-12) the complemented numbers are re-complemented. The total count is then the variable frequency plus one. Nineteen additional counts are required by the look-ahead logic, U3-1, 2, 3, 4, 5, 6, 12, 13 before triggering the pulse-stretcher, U10, for an additional 3 counts to provide loading time for the next count. Thus the total count is the dial frequency plus one plus nineteen plus 3 which produces the divisor, the dial frequency plus 23. The output

through buffers U6-3, 4, 10, 11 will then be 100kHz as long as the input frequency from the B offset loop is correct.

1.75 Output from the B offset loop enters through J1, is amplified by Q7-Q9 and buffered by U5-1, 2, 12, 13 to provide the logic level clock signal to the up-counter logic.

Semi-Auto CAL/BFO. 4600

1.76 This VCO/PLL circuit synthesizes the frequency to which the CE-70 is tuned using two Crystal Oscillator derived frequencies from the 10 MHz Ref/Divider, and the First L.O. This synthesized frequency is used for the Calibration signal and as the BFO output. See Block Diagram Figure 2.

1.77 The 50.7 MHz VCO, Q8, CR1, L4, output is buffered through Q9 to WT11/8, through Q19 to Output Mixer Z1. See Figures 32, 33. The output through Q10 goes to the PLL Mixer, T1, T2, CR2-CR5. The other input to the PLL Mixer is 50 MHz from the 10 MHz Ref./Divider Circuit, 3400, which enters through J1 and is amplified by Q1, Q2. The PLL Mixer output signal, 700 kHz, is amplified by U7, changed to a logic level signal by Q13, Q14, and divided by 7 in U5, U6. The 100 kHz output is applied to the Phase Detector, U2, where it is compared with a 100 kHz signal from the 10 MHz Ref/Divider. The DC level out of the Phase Dectector is passed through loop amplifier, U4, which is provided with a Latch Detector, Q4, Q5, then to the 100 kHz Notch Filter, C15-C17, R21, R24, R25, to the active 50 kHz Low Pass Filter, Q6, Q7. The Low Pass filter output is DC which controls the VCO.

1.78 The board is turned on either by the CAL switch in the CAL mode, or by the BFO switch when the BFO output is selected. The +15V to the board is controlled by switch U38, 9, 10, Q11 and Q12.

1.79 The VCO output from WT11 is connected to WT8, through the ALC Attenuator, R85, CR7, through a buffer, Q19, a 50.7 MHz Low Pass filter C56-C58, L13, a 3 dB attenuator R77-R79 to the input of the Output Mixer, Z1. See Figure 33. The other input to the Mixer is the 50,701.005 kHz to 75,700.005 kHz from the First L.O. This signal is brought in through J2, a buffer, Q15, Q16, a driver amplifier, Q17, Q18, to the Mixer.

1.80 The output from the Mixer is the exactly synthesized frequency to which the CE-70 is tuned, plus a 5 Hz offset. The BFO output then goes from 1.005 kHz to 25,000.005 kHz as the CE-70 is tuned from 1.00 kHz to 25,000.00 kHz. This output passes through the pre-amplifier, Q20, Q21, through a 25 MHz Low Pass filter, C64-C72, L14-L17, through 0 dBm Output Amplifier, Q22-Q24 to relay, K1. The relay switches the output according to the selected use, for BFO output through J3, or CAL output through a 40 dB attenuator. This attenuator is factory adjusted to provide a very accurate -40 dBm calibration signal to the CE-70 input.

1.81 An output is taken from the 0 dBm Output Amplifier through detector, CR10, which provides the DC input to the ALC Loop Amplifier, U9. A reference voltage from CR8, buffered by U8, is made adjustable with R113, which is the Front Panel CAL control. The output of U9 then controls the attenuation provided by CR7 to complete the loop.

10 MHz Reference Divider. 3400

1.82 This Circuit provides all the precision reference frequencies used in the instrument. See Figure 22. The source of these frequencies is the very stable 10 MHz Transistorized Crystal Oscillator, TCXO. For maximum stability of this oscillator the power to the Oscillator is regulated by Q5, U9. The +5V supply to the integrated circuits is regulated by U10.

1.83 Output signals from the circuit are both sine wave and logic level. Four 10 MHz sine wave outputs are provided through buffer amplifiers, Q12, Q13, Q14, Q15 at J3, J4, J5, J6. A 10 MHz signal is amplified by Q6, transformer coupled to a x5 harmonic amplifier, Q7, Q8, Q9, passed through a 50 MHz Band Pass filter to the filter output buffer, Q10, Q11. One 50 MHz output goes directly out through J2, while another output is buffered through Q3, Q4 to J1.

1.84 Another output from the TCXO is amplified by Q2, transformer coupled to Q1, an overdriven amplifier, which provides a logic level signal to the input of the divider chain U1-U5.

1.85 U1 divides by 2 to produce 5 MHz, U2 divides by 5 to produce 1MHz and U3-U5 each divide by 10 to produce 100kHz, 10kHz, 1kHz respectively. These outputs are buffered by the circuits of U6. U7 causes a slight delay for the 1 kHz output.

Frequency Entry. 2300

1.86 The Frequency Entry board, see Figure 13, accepts the setting of the BCD (binary coded decimal) front panel switches and the output of the search circuit. This data is transferred to the Frequency and Level Display Multiplex board, 2200, for the Frequency Display. The data is also transferred to the Programmable Divider board, 4200, to set up the frequencies of the Phase Lock Loops.

1.87 In the normal dial select frequency input mode, the BCD output of the Frequency selector switches is stored in the up/down counters, U2, U5-10. These counters are in a load state, load inputs low, because the input from the SEARCH switch through P1-4 to U1-8 is high. The input data immediately appears at the output of the counters and passes out to the Display Multiplexer and to the Programmable Divider.

1.88 In the search mode, input to U1-8 is low, removing the load signal from the up/down counters. They now count up or down according to the signal pulses present at the up (CU) on down (CD)

inputs. The counters all count in sequence because the carry and borrow outputs are connected to the following counter CU and CD inputs.

1.89 The Hz per step function of the SEARCH control is selected by switching the count from the search dial, either to the input of U8 through U12 for 1 kHz per step; to U9 through U13 for 100 Hz per step or to U10 through U14-1, 2, 3, 11, 12, 13 for 10 Hz per step.

1.90 The sense of up or down is determined by the tuning logic circuits connected to the input of U10 (all or parts of U4, U11, U14, U16, U17, U18). U17 is a 100 mS one-shot. U7-8, 9, 10, 11, 12, 13 is an R-S flip-flop. C4-R15-R16, C8-R11-R13, C9-R16-R17, are differentiators in the output of the inverters, U11. U16-4, 5, 6, 8, 9, 10 and U14-4, 5, 6 are gates controlling the input to the counters.

1.91 The search pulses are generated by light pickup from white dots on a rotating disk with a black background. They are illuminated by light emitting diodes, Figure 9, and the reflected light is picked up by light sensitive transistor sensors. The two sensors are slightly offset from one another with respect to the white dot track so that direction of rotation may be sensed, that is, which output leads the other. The direction of rotation is translated into either a count-up or count-down pulse for the counters.

1.92 The input through Q1 is designated A and the input through Q2 is B. CW rotation, or count-up, is sensed when A leads B. CCW rotation, or count-down is sensed when B leads A. Up or down pulses for the counters are generated by the tuning logic of U4, U11, U14, U16 and U18.

1.93 The clock pulse maximum rate is controlled by the one-shot, U17, which is triggered by the trailing edge of the counting pulse into the counter, either up or down. While the one-shot is "on", the R-S flip-flop, U4, is reset and pulses from U14-8 have no effect. The one-shot thus inhibits the counter input for 100 mS, so that the frequency may not be changed too rapidly, in order to make certain that the phase lock loops remain locked.

1.94 When the one-shot changes state the R-S F/F may be triggered by either the B-differentiated pulse or the $\overline{B}$-differentiated pulse. When A leads B the B-differentiated pulse triggers the F/F enabling U16-8, 9, 10 so that when the A-differentiated pulse appears it passes through U16-10, 8. At the same time the B pulse to U14-5 enables U18-1, 2, 3, so the A-differentiated pulses pass to the counter as up-counts. The trailing edge of this count again triggers U17 and the counter input is inhibited for 100 mS.

1.95 When B leads A the one-shot changes state at a time when the $\overline{B}$-differentiated pulse can trigger the F/F to enable U16-8, 9, 10. At the same time the $\overline{B}$-pulse to U16-5 enables U18-4, 5, 6 so that the A-differentiated pulse passes through to the counter as a down-count.

1.96 When the CE-70 is first turned on, a power-on-reset (POR or $\overline{POR}$) pulse is generated to initiate some functions. An integrator, the +5V at turn-on, and U11-3, 4 produce the pulse which goes through U1-9, 10 to cause a momentary counter load condition. The pulse also goes through U11-5, 6 to provide the Power On Reset pulse which resets other circuits in the instrument.

1.97 The out of limits frequency detector is made up of U19-1, 2, 3, 4, 5, 6, 11, 12, 13, U3-4, 5, 6, 11, 12, 13, U4-4, 5, 6. This logic is connected to the outputs of the 1 MHz and 10 MHz counters. It indicates a condition in which the frequency dials are set for a frequency above 26 MHz or below zero MHz. In either case the display is put in the Flash mode by the output of U18-10. Also the below zero condition causes the count down function to be inhibited through U4-4 and U16-4, 6. In the above 26 MHz condition the count up function is inhibited through U3-11 and U14-4, 6.

1.98 U20 is a one-shot multivibrator that is triggered whenever the output of U9 changes from 0 to 9 or vice versa. The one-shot output operates the Meter Transient Suppression Circuit on the Meter/Audio Amplifier board, 4500, to prevent the transients generated by this condition from reaching the Meter.

Frequency and Display Level Multiplex. 2200

1.99 This circuit samples each decade of both the frequency and level switches in sequence and applies the output to the display driver. Each LED in the display is also turned on in the same sequence and at the proper time to display the data present at each switch. This takes place very rapidly so the eye sees only a continuous display of all data. Refer to Figure 12.

1.100 The source of the display timing sequence is the multivibrator oscillator, U15. The Oscillator output frequency is converted to BCD in the counter, U14, and applied to the BCD to Decimal decoder driver, U13. This output is used to control each decade AND gate U1-U7, U10, U11, in sequence. The output of all the AND gates are connected to the BCD to 7 segment Decoder Driver, U9, but only the data of the AND gate that is "on" is seen by the Decoder Driver at any one time.

1.101 The output of the 7 segment Display Driver is applied to all the display LED's in parallel, see Figure 7, but only one LED Anode is turned on at a time by the same pulse that controls the decade AND gates. Each LED comes on about every .6 mS to the repetition rate is much faster than the eye can follow so that display appears to be continuous.

1.102 The circuit Q2, Q3 is a Multivibrator Oscillator having a repetition rate of approximately 5 Hz. The output is applied to the Oscillator, U15, to FM the output in order to avoid "beats" at

sub-harmonics of the display multiplex rate.

1.103 U16 is a low frequency Oscillator, approximately 2 Hz, which controls the flashing display whenever the selected frequency is set below zero or above 26 MHz. The output switches Q1 which controls the flashing of the BCD-to-7 Segment Decoder Driver.

1.104 Another input to Q1 through R5 is from the logic that causes the Level display to be blanked when the PRESS TO CAL switch is depressed. To suppress the leading zero when the LEVEL display is set for 0 dBm (rather than 00 dBm), the logic of U18-11, 12, 13 blanks the 7 segment driver during the time of sampling the tens digit number in the Level display.

1.105 The logic of U19 is controlled by logic signals from the Attenuator and Gain Select circuits on board 2400. The output of this logic goes to the Frequency and Level Display board, 1100, to select the plus or minus sign. Also the figure "one" is selected when a display of -100 dB is required in the Level Display.

Attenuator and Gain Select. 2400

1.106 This circuit contains the logic through which the front panel Units and Tens dB switches and the CAL switches control the Attenuators, 2500 and 2600, and the Level Display, also the gain of the Amplifiers in the Programmable IF Circuit, 4400, according to the setting of the TONE/NOISE switch. See Figure 14.

1.107 The Tens dB and the CAL switch control the Tens dB Attenuator through the logic of U2, U6-1, 2, 3, and the switches Q5-Q9. The Units dB and the CAL switches control the Units dB Attenuator through the logic of U1, U5-12, 13 and switches Q1-Q4. The CAL switch overrides to set all the attenuators to maximum and select the CAL relay for Level calibration. The units and Ten dB switches also control the LEVEL display through the OR gates CR1-CR8 and CR9-CR16. The remainder of the logic functions control the Programmable IF Amplifiers for the different settings of the TONE/NOISE switch to provide the required additional 20 dB gain in the NOISE mode. Also there is logic to sense when a + or - sign, a 1 for -100 dBm, and no leading 0 for 0 dBm, should be generated by the display.

1.108 This circuit contains the Display readout for both Frequency and Level. LEDs 1-7, 9, 10, (See Figure 7) have each of the seven segment cathodes connected in parallel. Each segment line bus has a separate driver Q15-Q21 through which the data is entered to the LED segments. The anodes of each LED unit are controlled by separate switches, Q1-Q14, Q22-Q25. The anodes are selected in a sequence controlled by the circuits of the Frequency Level and Display Multiplexer, 2200. LED 8 displays the signs +, -, or the figure 1, according to the data received from the Display Multiplexer. This circuit also contains seven BCD switches for frequency selection and frequency code generation for the Frequency Entry Board.

Shaft Encoder. 1200

1.109 The Shaft Encoder is a heavy flywheel supported by bearings, having a black circular card with white spots equally spaced around the circumference. Each of the two sensing units is made up of a light emitting diode which is directed toward the rotating spots and a photo sensitive transistor that picks up the light pulses from the white spots as they rotate past the sensors. The sensors are slightly offset from one another with respect to the white spot track. This makes it possible for the logic, operated by output pulses from the light pickup, to determine the direction of rotation. This logic is on the Frequency Entry board, 2300.

Power Supply. 4700

1.110 The power supply employs three bridge rectifiers made up of discrete diodes, CR-1, CR4, CR&-CR10, and CR12-CR15. The rectifier outputs are regulated using linear I.C. regulators. See Figure 34.

1.111 The +15V and -15V supplies must be very stable so two steps of regulation are employed. U1 and U4 are 18V regulators, followed by U2 and U5 which are 15V regulators which provide the +15 and -15V supplies. The same rectifier that supplies the +15V output is also used for U3 which provides the +12V supply in only one regulating step.

1.112 The output of the rectifier CR12-CR15 is connected to three 8V regulators, U6, U7, U8, for the required 8V supplies. From these supplies the on board 5V regulators provided the +5V required by the board I.C.'s. Each of the six supplies is protected against reverse voltage by a diode across the output.

# SECTION 2
# MAINTENANCE

GENERAL

2.01 This section of the manual contains the information necessary to check the performance of the CE-70 and to make the recommended field adjustment.

2.02 Since the CE-70 contains some rather complicated, high precision circuits which require special equipment which has been specially calibrated for alignment and adjustment and special procedures in making these adjustments, it is recommended that the instrument be returned to the factory for recalibration or repair. Please contact the Cushman Electronics, Inc. Customer Service Department for further instructions before returning an instrument.

PERFORMANCE CHECK

Test Equipment Required

2.03 Any equivalent instrument may be used in place of the following listed equipment if necessary. Calibration charts and calibration accuracy of both the instruments and the connecting cables must be known and the corrections applied to the measurements.

| | |
|---|---|
| Signal Generator | Cushman CE-72 |
| Signal Generator | HP8660A/86601A |
| Tracking Generator | HP8443A |
| Spectrum Analyzer | HP141T/8553B/8552B |
| Frequency Counter | HP5245L |
| Phase Jitter Meter | Bradley 75LA |
| White Noise Generator | Sierra M330A-G |
| Distortion Analyzer | HP331A |
| 1 MHz Low Pass Filter | Cirqtel FLT-21B-1-3-75-3A |
| Reflection Transmission Kit | HP11652A-75Ω |
| 75Ω/50Ω Minimum Loss Pads | Tescan ZM-57 |
| 75Ω Termination | Texscan FT-75 |
| BNC/BNC 75Ω Cables | With known attenuation |

Level Measurement Accuracy

2.04 Make the rear panel connections between the CE-70 and CE-72 for tracking mode operation (connect like red lettered connectors together on the rear panel).

2.05 Set the instrument controls as follows:

CE-70

| | |
|---|---|
| Frequency | 1000.00 kHz |
| IMPEDANCE | 75Ω, TERM |
| NORM/EXP | EXP |
| TONE/NOISE | TONE |
| LEVEL | 0 dBm |
| BANDWIDTH | 75 Hz |
| BFO (rear panel) | OFF |

CE-72

| | |
|---|---|
| Frequency | 1000.00 kHz |
| IMPEDANCE | 75Ω |
| OUTPUT | ON |
| TUNING | EXT |
| LEVEL | 0 dBm |

2.06 Connect the output of CE-72 to the input of the CE-70 using a 75Ω cable with known attenuation. Proceed with following steps:

a. Depress the PUSH TO CAL button on the CE-70. Adjust the CAL control for 0 dB on the meter. Release the PUSH TO CAL button.

b. Record the CE-70 meter reading.

c. Set the CE-70 to the following frequencies and record the reading on the meter. 1 kHz, 3 kHz, 10 kHz, 30 kHz, 100 kHz, 300 kHz, 1 MHz, 10 MHz, 15 MHz, 18.6 MHz, 25 MHz. Repeat step a. before making each reading.

d. Apply the proper correction from the calibration data of the CE-72 and the 75Ω connecting cable.

e. The corrected level should be:

| | |
|---|---|
| 1kHz to 10 kHz | 0 dB ±0.30 dB |
| 10 kHz to 18.6 MHz | 0 dB ±0.15 dB |
| 18.6 MHz to 25 MHz | 0 dB ±0.25 dB |

NOTE: Calibration at other levels can be carried out, if an accurately calibrated variable attenuator is available, by following the steps given above.

BFO Level and Frequency

2.07 Set the CE-70 to 1000.01 kHz. Set the Rear Panel BFO switch to ON and connect the BFO OUTPUT (rear panel) to the front panel INPUT, 75Ω, UNBAL, TERM. Use a 75Ω cable of known attunuation. Set the CE-70 LEVEL to 0 dBm.

a. Depress the PUSH to CAL button and adjust the CAL control for 0 dB on the meter.

b. Release the PUSH TO CAL button. The meter should read 0 dBm ±0.2 dB minus the attenuation loss of the cable for 1 MHz.

c. Set the CE-70 Frequency to 10 kHz, 30 kHz, 100 kHz, 300 kHz, 10 MHz 15 MHz, 18.6 MHz, and 25 MHz. Repeat step a. before making each reading. Meter should read 0 dBm ±0.2 dB minus the attenuation loss of the cable for that frequency, at each frequency measured.

d. Set the CE-70 to 1 kHz, 3 kHz, 9 kHz. Repeat step a. before making each reading. The meter should read 0 dBm ±0.25 dB minus the attenuation loss of the cable.

e. Disconnect the connecting cable from the CE-70 INPUT and connect the BFO OUTPUT to the input of a Frequency Counter synchronized with a reference having an accuracy of 1 part in $10^8$

f. Set the CE-70 to the following frequencies and read frequency with the counter.

| CE-70 | Counter |
|---|---|
| 00001.00 kHz | 00001.000 kHz ±20 Hz |
| 01000.00 kHz | 01000.000 kHz ±21 Hz |
| 10000.00 kHz | 10000.000 kHz ±30 Hz |
| 25000.00 kHz | 25000.000 kHz ±45 Hz |

Bandwidth Check

2.08 Set the CE-72 Frequency to 2500.00 kHz and set TUNING TO INT. Set the CE-70 Frequency to 2500.00 kHz and set meter switch to NORM. Both the CE-72 and the CE-70 should be set to 0 dBm. Reconnect the OUTPUT of the CE-72 to the 75Ω, UNBAL, TERM INPUT of the CE-70.

a. Depress the CE-70 PUSH TO CAL button and adjust CAL control for a 0 dB reading on meter. Release PUSH TO CAL button. Set BANDWIDTH to 1.74 kHz.

b. Tune CE-72 for a -3 dB reading on the CE-70 meter on both sides of 2500.00 kHz and note the frequency at each point. The -3 dB bandwidth should be 2300 Hz ±230 Hz.

c. To check the 3.1 kHz Bandwidth, set the CE-70 to the 3.1 kHz BW position and repeat step b. The -3 dB bandwidth should be 3100 Hz ±310 Hz.

d. Replace the CE-72 with the Synthesizer Signal Generator. Set frequency to 2500.00 kHz and set Level output for a 0 dBm reading on the CE-70 meter, at 2500.00 kHz. Set the BANDWIDTH to 75 Hz and tune the Signal Generator for a -3 dB reading on the CE-70 meter on both sides of 2500.00 kHz and note the frequency at each point. The -3 dB bandwidth should be 75 Hz ±8 Hz.

Return Loss, 75Ω

2.09 Makes return loss measurement set up as shown below and make Tracking Generator/ Analyzer connections.

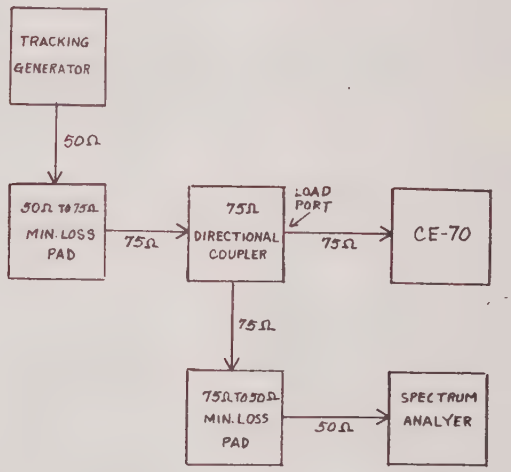


2.10 Set instrument controls as follows:

Tracking Generator

| | |
|---|---|
| Function | Tracking Analyzer |
| Mode | Marker |
| Resolution | 10 Hz |
| RF Output Level | -20 dBm |

Spectrum Analyzer

| | |
|---|---|
| Input Attenuation | 10 dB |
| Scan Width | 5 MHz/Div |
| Bandwidth | 30 kHz |
| Log Ref. Level | -40 dBm |
| Scan Time | 10mSec/Div |
| 10 dB/2 dB/Linear | 10 dB/Div |
| Center Frequency | 25 MHz |

CE-70

| | |
|---|---|
| Frequency | 1000.01 kHz |
| Level | -79 dBm |
| TONE/NOISE | TONE |

2.11 Make the measurement as follows:

a. With the "Load" port unterminated, set the Spectrum Analyzer level for a trace at the top reference line on the CRT screen.

b. Terminate the "Load" port with a 75Ω termination. The trace should drop below the -40 dB line, 1 MHz to 25 MHz. Remove termination.

c. Connect the "Load" port of the Directional Coupler to the 75Ω input connector on the CE-70.

d. The return loss up to 25 MHz should be greater than 30 dB.

e. Set the CE-70 Level to -89 dB. The return loss up to 25 MHz should be greater than 20 dB.

f. Set the TONE/NOISE control to NOISE. The minimum return loss for -89 dBm should be 30 dB; for -99 dBm, 20 dB; for -109 dBm, 10 dB typical.

Harmonic Distortion

2.12 Connect the CE-72 75Ω output to the 1 MHz Low Pass Filter and connect the output of the Filter to the 75Ω UNBAL TERM input of the CE-70.

a. Set both the CE-72 and the CE-70 to 1000.00 kHz and set both levels to -10 dBm. Set the CE-72 TUNING to INT.

b. Set the CE-70 Frequency to 2 MHz and set Level for -70 dBm. The meter should read below -15 dB showing 75 dB below fundamental for 60 dB sensitivity increase.

Noise Power Ratio (NPR)

2.13 Connect the White Noise Generator to the CE-70 75Ω, UNBAL, TERM INPUT and set the controls as follows:

CE-70

| | |
|---|---|
| Frequency | 2438 kHz |
| LEVEL | -37 dBm |
| Impedance | 75Ω |
| NORM/EXP | NORM |
| TONE/NOISE | NOISE |
| BANDWIDTH | 1.74 kHz |

White Noise Generator

| | |
|---|---|
| LINE | ON |
| ATTENUATION | 0 dB |
| High Pass 60 kHz | Button depressed |
| Low Pass 8204 kHz | Button depressed |
| Band Stop | Buttons out |
| Low Pass 2660 kHz | Button out |

2.14 Make the following settings and note readings as follows:

a. Note noise level reading on the CE-70 with set up as given above.

b. Depress the 2438 kHz band stop button. Set the CE-70 Level to -77 dBm and note noise level reading.

c. Subtract the reading of b. from the reading of a. This difference is the NPR and should be greater than 54 dB.

d. Repeat steps a-c except use 8002 kHz, and determine levels. The NPR should be greater than 56 dB.

Phase Jitter.

2.15 Connect the 75Ω OUTPUT of the CE-72 to the 75Ω, UNBAL, TERM INPUT of the CE-70. Set the controls as follows.

CE-72

| | |
|---|---|
| Frequency | 11,001.00 kHz |
| LEVEL | 0 dBm |

CE-70

| | |
|---|---|
| Frequency | 11,000.00 kHz |
| LEVEL | -5 dBm |
| TONE/NOISE | TONE |
| BANDWIDTH | 1.74 kHz |
| AUDIO | USB |

Phase Jitter Meter

| | |
|---|---|
| BRIDGE/600 or 900 | 600 or 900 |
| Scale | 6° |

a. Connect Phase Jitter Meter to either MONITOR jack on the CE-70 using a W.E. 310 plug. Phase jitter should be 0.5° P-P nominal.

ADJUSTMENT

Time Base Adjustment

2.16 Connect a Counter, synchronized to a reference having an accuracy of 1 part in $10^8$, to the CE-70 rear panel BFO connector. Allow a four hour warm up before adjusting.

a. Adjust the TCXO screw drive adjust for a BFO output frequency of 25,000.005 kHz ± 1 Hz. (TCXO located on 3400 board. See figures 19 and 22.)

TROUBLESHOOTING

Troubleshooting Chart

| Trouble Indication | Possible Cause |
|---|---|
| 1. No LED display, unable to CAL, no fan. | Line fuse open. Faulty AC switch. |
| 2. No LED display but fan running. | Faulty 2200 board. Ribbon cable from 1100 board to digital boards loose or disconnected. |
| 3. No CAL but input signal reads OK. | Faulty 4600 board. Cable faulty, loose or disconnected. |
| 4. No CAL, No input signal reading. | Normal or EXP button not depressed, or CAL button not depressed. Power supply faulty. Cable (B, C, D, K, S, T, W or X) loose or disconnected. One or more of 3200, 3300, 3400, 4300, 4400, 4500 boards faulty. |
| 5. No CAL and no LED display | +8 VDC and/or other power supply voltages low or missing. |
| 6. CAL ok but will not read input signal. | Faulty 3500, 3600 or 4200 board. Cables (J, L, N, P) loose or disconnected. |
| 7. With CAL button out, get a Frequency display but no Level display except ± 1. | Faulty 2400 board. |
| 8. When set to CAL and input set to 75Ω, Overload light on. | -15 VDC from power supply low or missing. |
| 9. Frequency and Level displays blanked or some digits flashing, 10's MHz dial fully CCW (set to zero). | Faulty 2300 board. |
| 10. No BFO output. | CAL button depressed. BFO switch off. Faulty 4600 board. Cable loose or disconnected. |
| 11. BFO output frequency incorrect. | Faulty 3500, 3600, 4200 boards. Cable (J, L, N, P) loose or disconnected. |
| 12. Search mode inoperative | Faulty 2300 board. Sensor output voltages incorrect. |

NOTE

If the CE-70 Frequency Selective Levelmeter is to be operated alone, ensure that the rear panel BNC connector cable is installed between BNC's EA and AA.

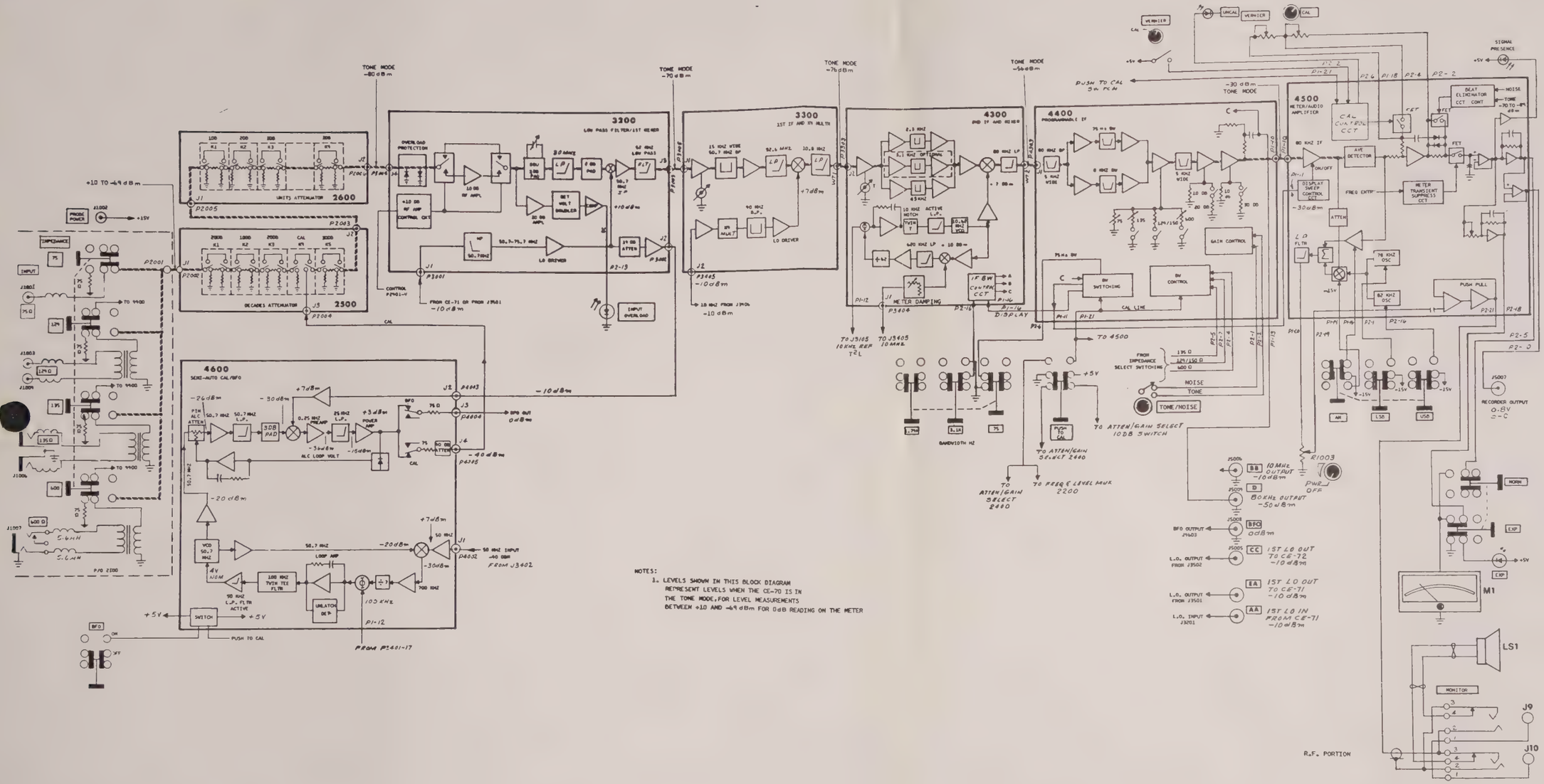
3200
3300
4300
4400
4500
4600
2600
2500
UNITS ATTENUATOR
DECADES ATTENUATOR
OVERLOAD PROTECTION
CONTROL PC401-V
FROM CE-71 OR FROM J3401
-10 dBm
INPUT OVERLOAD
1ST IF AND RF MULTR
LO DRIVER
2ND IF AND RF MULTR
METER DAMPING
TO J3105 10 KHz REF
TO J3405 10 MHz
DISPLAY
PROGRAMMABLE IF
BW SWITCHING
BW CONTROL
GAIN CONTROL
CAL LINE
TO 4500
FROM IMPEDANCE SELECT SWITCHING
NOISE
TONE
TONE/NOISE
TO ATTEN/GAIN SELECT 10DB SWITCH
BANDWIDTH HZ
TO ATTEN/GAIN SELECT 2440
TO FREQ & LEVEL MNR 2200
METER/AUDIO AMPLIFIER
CAL CONTROL CCT
BEAT ELIMINATOR CCT CONT
AVE DETECTOR
DISPLAY SWEEP CONTROL SCT
METER TRANSIENT SUPPRESS CCT
FREQ ENTRY
ATTEN
LO FLTR
78 KHz OSC
82 KHz OSC
PUSH PULL
AM
LSB
USB
RECORDER OUTPUT
0.8V
SEMI-AUTO CAL/BFO
ALC LOOP VOLT
VCO 50.7 MHz
LOOP AMP
100 KHz TWIN TEE FLTR
UNLATCH
SWITCH
PUSH TO CAL
FROM P3401-17
10 MHz OUTPUT -10dBm
80KHz OUTPUT -50dBm
BFO OUTPUT J4603
0dBm
1ST LO OUT TO CE-72 -10dBm
L.O. OUTPUT FROM J3502
L.O. OUTPUT FROM J3501
1ST LO OUT TO CE-71 -10dBm
L.O. INPUT J3201
1ST LO IN FROM CE-71 -10dBm
R1003
PWR OFF
HORN
EXP
M1
LS1
MONITOR
J9
J10
R.F. PORTION
TONE MODE -80 dBm
TONE MODE -70 dBm
TONE MODE -76 dBm
TONE MODE -56 dBm
-30 dBm TONE MODE
PUSH TO CAL 3m PCN
+10 TO -69 dBm
PROBE POWER
IMPEDANCE
INPUT
P/O 2100
P2001
P2002
P2003
P2005
P3001
P3002
P3003
P3004
P3005
P3303
P3304
P3305
P3306
P3307
P3308
P3309
P3310
P3311
P3312
P3313
P3314
P3315
P3316
P3317
P3318
P3319
P3320
P3321
P3322
P3323
P3324
P3325
P3326
P3327
P3328
P3329
P3330
P3331
P3332
P3333
P3334
P3335
P3336
P3337
P3338
P3339
P3340
P3341
P3342

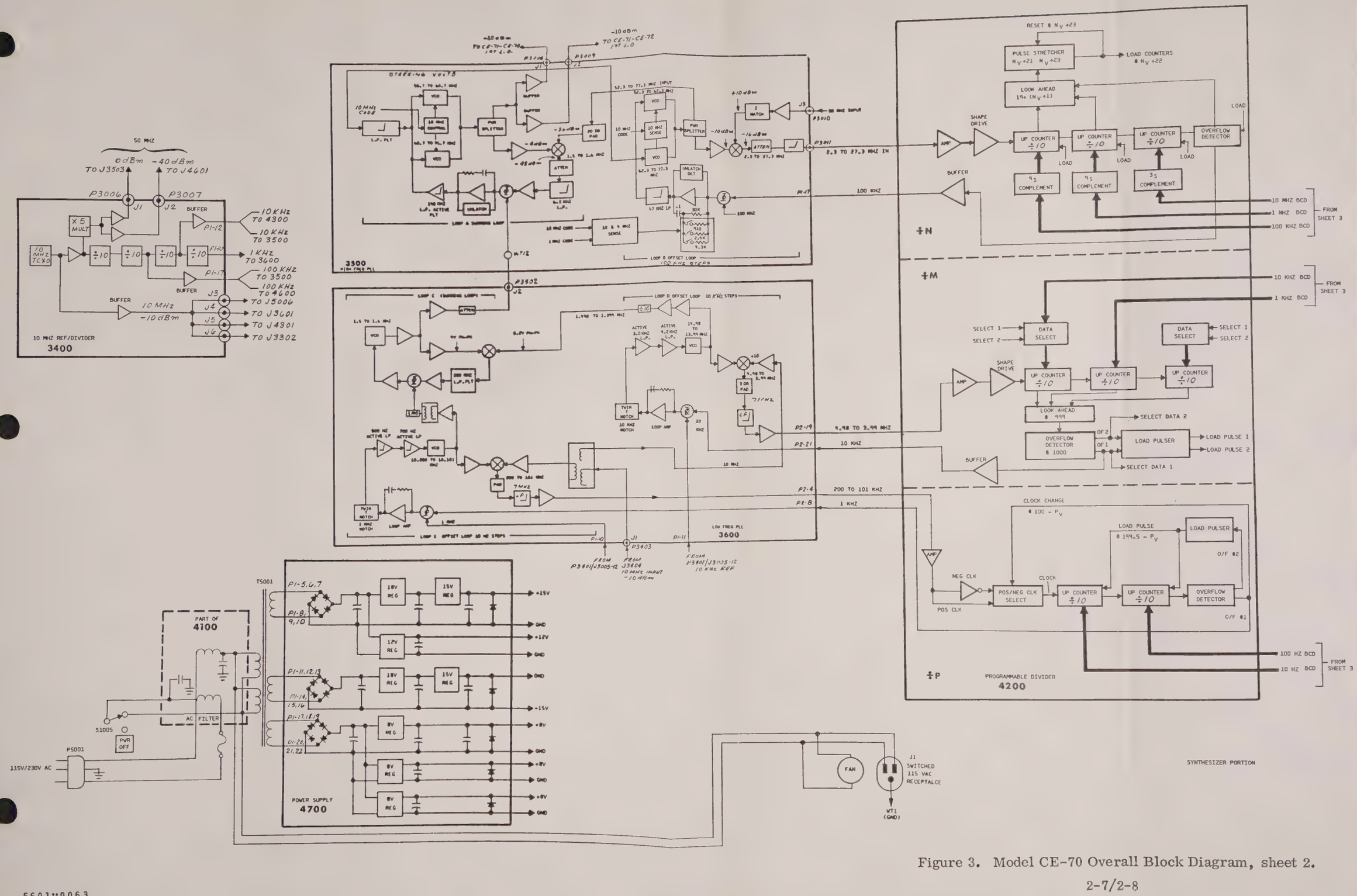


Figure 3. Model CE-70 Overall Block Diagram, sheet 2.

2-7/2-8

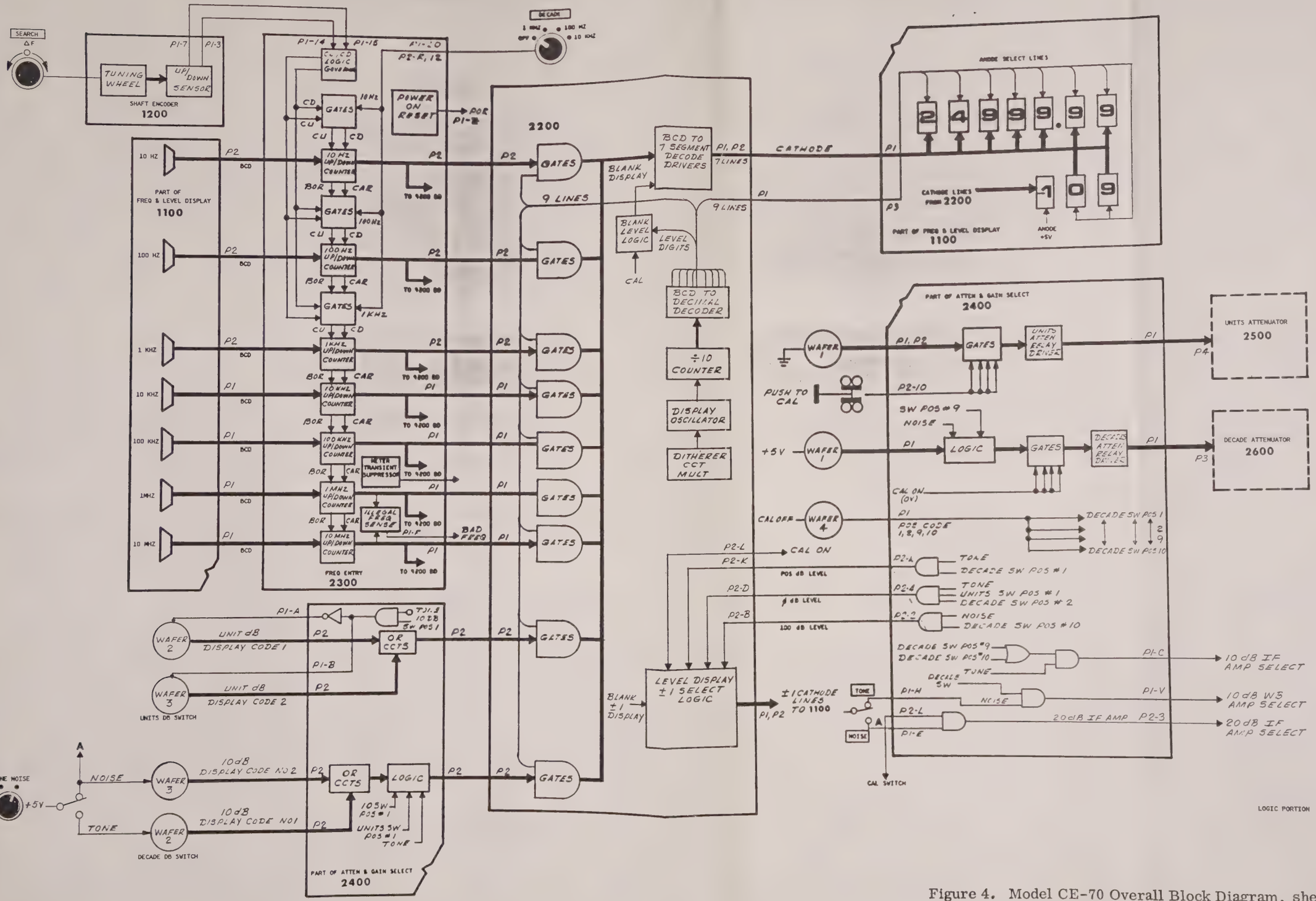


5601-0063

Figure 4. Model CE-70 Overall Block Diagram, sheet 3.

# SECTION 3
# PARTS LISTS AND SCHEMATIC DIAGRAMS

PARTS LISTS AND SCHEMATIC DIAGRAMS

3.01 The following parts lists and schematic diagrams have been arranged in order according to the Circuit Reference Series numbers. Refer to paragraph 1.02. Each schematic diagram and parts list is identified with this number. The circuit boards in the instrument are marked with an identifying Assembly Number. See Cross Reference Table 6-1 below.

3.02 Parts list pages are grouped with the schematic diagrams to which they refer. Component identification drawings showing the location of the individual components on the circuit board are placed on the inner sheet of the schematic diagram to which they apply.

TABLE B. PRINTED CIRCUIT BOARD CIRCUIT REFERENCE NUMBER CROSS REFERENCE

| PC Board No. | Circuit Title | Circuit Ref. No. | Assembly No. | Figure No. | Page No. |
|---|---|---|---|---|---|
| 1780-0539 | Extender | 0000 | 7001-0303 | | |
| 1780-0540 | Frequency and Level Display | 1100 | 7001-0281 | 7, 8 | 3-11, 13 |
| 1780-0541 | High Frequency Phase Lock Loop | 3500 | 7001-0291 | 23, 24 | 3-79, 81 |
| 1780-0542 | Frequency and Level Display Multiplex | 2200 | 7001-0285 | 12 | 3-25 |
| 1780-0543 | Low Frequency Phase Lock Loop | 3600 | 7001-0292 | 25, 26 | 3-91, 93 |
| 1780-0564 | Programmable Divider | 4200 | 7001-0429 | 27 | 3-99 |
| 1780-0545 | Frequency Entry | 2300 | 7001-0286 | 13 | 3-29 |
| 1780-0546 | First IF and X4 Multiplier | 3300 | 7001-0289 | 21 | 3-61 |
| 1780-0547 | Digital Interconnection Diagram | 2000/2100 | 7001-0284 | 10, 11 | 3-19, 21 |
| 1780-0548 | Attenuator and Gain Select | 2400 | 7001-0287 | 14 | 3-33 |
| 1780-0549 | Second IF and Mixer | 4300 | 7001-0311 | 28 | 3-107 |
| 1780-0550 | Low Pass Filter and First Mixer | 3200 | 7001-0288 | 20 | 3-55 |
| 1780-0551 | Programmable IF | 4400 | 7001-0295 | 29 | 3-113 |
| 1780-0552 | Meter/Audio Amplifier | 4500 | 7001-0296 | 30 | 3-121 |
| 1780-0553 | Semi-Auto CAL/BFO | 4600 | 7001-0297 | 31, 32 | 3-129, 131 |
| 1780-0559 | Shaft Encoder | 1200 | 7001-0389 | 9 | 3-15 |
| 1780-0556 | 10 MHz Reference/Divider | 3400 | 7001-0290 | 22 | 3-69 |
| 1780-0557 | Main Chassis Interconnection Diagram | 4000/4100 | 7001-0280 | 18 | 3-47 |
| 1780-0558 | Power Supply | 4700 | 7001-0298 | 33 | 3-135 |
| 1780-0560 | Decade Attenuator | 2500 | 7001-0282 | 15 | 3-37 |
| 1780-0561 | Units Attenuator | 2600 | 7001-0283 | 16 | 3-41 |
| | Front Panel Interconnection Diagram | 1000 | 7003-0092 | 5, 6 | 3-3, 5 |
| | Main Chassis Interconnection Diagram | 3000/3100 | 7001-0280 | 17 | 3-45 |
| | Main Chassis Interconnection Diagram | 3000/4000 | | 19 | 3-49 |
| | Rear Panel | 5000 | 7003-0093 | 34 | 3-139 |

FRONT PANEL, 1000

| CKT. REF. | DESCRIPTION | CE STOCK NO. | MFR. | MFR. NO. |
|---|---|---|---|---|
| 1000 | Front Panel Assembly | 7003-0092 | Cushman | |
| | DIODES | | | |
| CR1 | CM4-73, W/MTG Grommet | 1281-0073 | Chicago MIN | CM4-73 |
| CR2 | Light Emit, Grn, Med, Ang, W/MTG Grom | 1281-0096 | Chicago MIN | CM4-68 |
| CR3 | Light Emit, Grn, Med, Ang, W/MTG Grom | 1281-0096 | Chicago MIN | CM4-68 |
| CR4 | CM4-73, W/MTG Grommet | 1281-0073 | Chicago MIN | CM4-73 |
| | CONNECTORS | | | |
| J1 | JK, Assy, Input | 7040-0042 | Cushman | |
| J2 | JK, Assy, Input | 7040-0042 | Cushman | |
| J3 | JK, Assy, Input | 7040-0042 | Cushman | |
| J4 | JK, Assy, Input | 7040-0042 | Cushman | |
| J5 | JK-2, Cond, Open, CKT, Audio | 2586-0019 | Switchcraft | 31 |
| J6 | JK-2, Cond, Open, CKT, Audio | 2586-0019 | Switchcraft | 31 |
| J7 | Jack, Tip, Ring, Sleeve | 2586-0012 | Switchcraft | 12B |
| J8 | Not Used | | | |
| J9 | JK-3, Cond, Single, CL CKT, Audio, Isol | 2586-0020 | Switchcraft | N-113B |
| J10 | JK-3, Cond, Single, CL CKT, Audio, Isol | 2586-0020 | Switchcraft | N-113B |
| | INDUCTORS | | | |
| L1 | RF Choke, 5.6μH, ±10% | 1585-0056 | Cushman | |
| L2 | RF Choke, 5.6μH, ±10% | 1585-0056 | Cushman | |
| | RESISTORS | | | |
| R1 | Pot, 10K, ±20%, 75W | 1203-0080 | CTS | X6P1313-VA305 |
| R2/S4 | Pot, 5K, ±5%, 2W, W/SPST | 1203-0079 | CTS | BE54574-055-551 |
| R3/S5 | Pot, 1K, ±20%, 1/2W, W/DPST | 1203-0078 | CTS | JK1705-FR-027-45-4D |
| | SWITCHES | | | |
| S1 | Rty, 1 Pole, 2 Position | 1851-0091 | CTS | |
| S2 | Assy, Decades Attenuator | 7011-0026 | Cushman | |
| S3 | Assy, Units Attenuator | 7011-0027 | Cushman | |
| S4 | P/O R2 | | | |
| S5 | P/O R3 | | | |
| S6 | Rty, 1 Pole, 4 Position | 1851-0097 | CTS | X5P6714 |
| S7 | PB, 3 Sta, Dpdt, Mech Color Ind | 1852-0024 | Cushman | |
| | INTEGRATED CIRCUIT | | | |
| | IC, FPA-103 Light Refl EM/Sensor Array | 2025-0116 | Fairchild | FPA-103 |

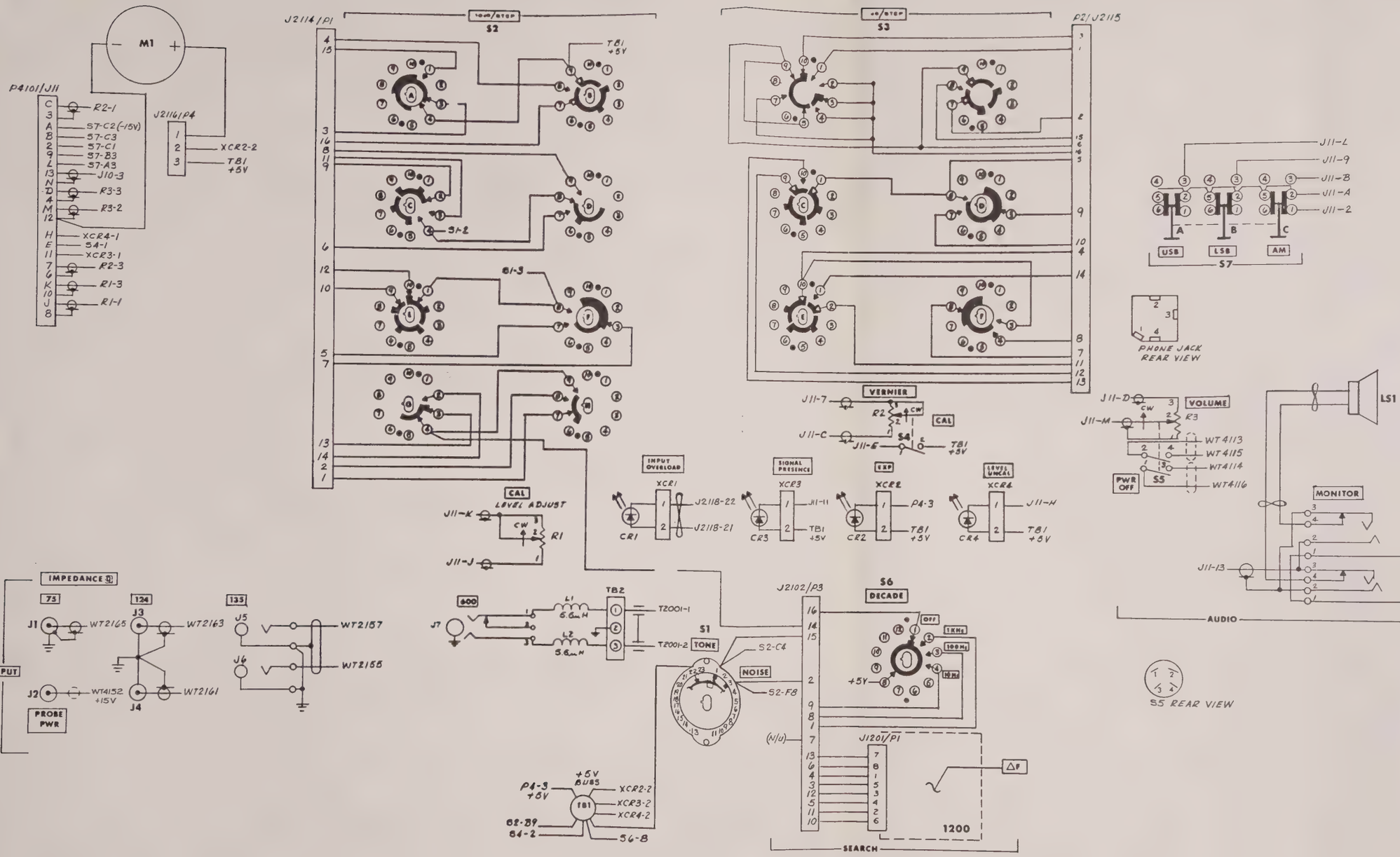


Figure 5. Front Panel Interconnection Diagram, 1000, sheet 1

3-3/3-4

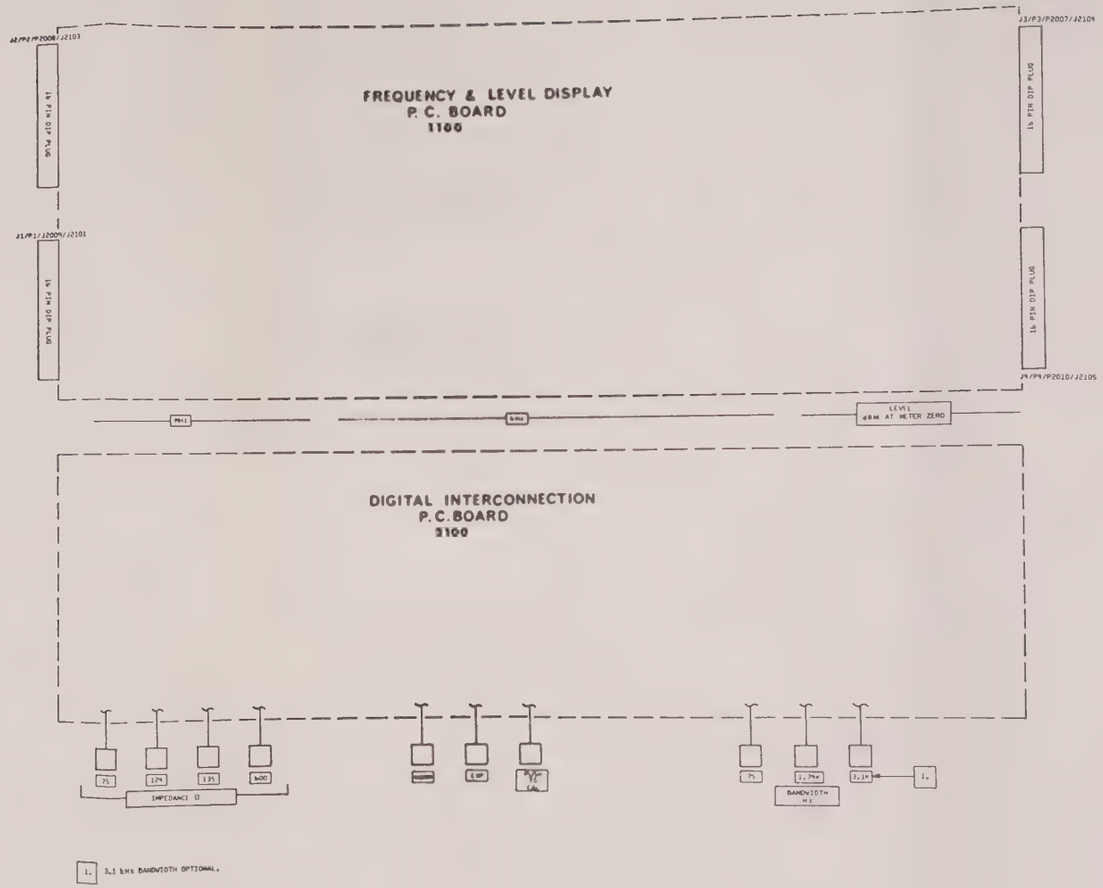


Figure 6. Front Panel Interconnection Diagram, 1000, sheet 2.

FREQUENCY & LEVEL DISPLAY, 1100

| CKT. REF. | DESCRIPTION | CE STOCK NO. | MFR. | MFR. NO. |
|---|---|---|---|---|
| 1100 | Frequency and Level Display PCB Assy | 7001-0281 | Cushman | |
| | P.C. Board | 1780-0540 | Cushman | |
| | CAPACITORS | | | |
| C1 | Tant, 10μF, +50-20%, 35V | 1011-0006 | ITT | TAG-10/35-20 |
| C2 | Tant, 10μF, +50-20%, 35V | 1011-0006 | ITT | TAG-10/35-20 |
| C3 | Tant, 10μF, +50-20%, 35V | 1011-0006 | ITT | TAG-10/35-20 |
| C4 | Tant, 10μF, +50-20%, 35V | 1011-0006 | ITT | TAG-10/35-20 |
| C5 | Tant, 10μF, +50-20%, 35V | 1011-0006 | ITT | TAG-10/35-20 |
| C6 | Tant, 10μF, +50-20%, 35V | 1011-0006 | ITT | TAG-10/35-20 |
| C7 | Tant, 10μF, +50-20%, 35V | 1011-0006 | ITT | TAG-10/35-20 |
| C8 | Tant, 10μF, +50-20%, 35V | 1011-0006 | ITT | TAG-10/35-20 |
| | CONNECTORS | | | |
| J1 | Skt-16 Pin Dual Inline IC | 2606-0006 | Cinch | 133-51-20-006 |
| J2 | Skt-16 Pin Dual Inline IC | 2606-0006 | Cinch | 133-51 20-006 |
| J3 | Skt-16 Pin Dual Inline IC | 2606-0006 | Cinch | 133-51-20-006 |
| J4 | Skt-16 Pin Dual Inline IC | 2606-0006 | Cinch | 133-51-20-006 |
| | READOUT | | | |
| LED1 | Alpha-numeric, Seg Readout HP7730 | 1281-0081 | HP | 5082-7730 |
| LED2 | Alpha-numeric, Seg Readout HP7730 | 1281-0081 | HP | 5082-7730 |
| LED3 | Alpha-numeric, Seg Readout HP7730 | 1281-0081 | HP | 5082-7730 |
| LED4 | Alpha-numeric, Seg Readout HP7730 | 1281-0081 | HP | 5082-7730 |
| LED5 | Alpha-numeric, Seg Readout HP7730 | 1281-0081 | HP | 5082-7730 |
| LED6 | Alpha-numeric, Seg Readout HP7730 | 1281-0081 | HP | 5082-7730 |
| LED7 | Alpha-numeric, Seg Readout HP7730 | 1281-0081 | HP | 5082-7730 |
| LED8 | Plrt-Ovfl, Seg Readout HP7732 | 1281-0082 | HP | 5082-7732 |
| LED9 | Alpha-numeric, Seg Readout HP7730 | 1281-0081 | HP | 5082-7730 |
| LED10 | Alpha-numeric, Seg Readout HP7730 | 1281-0081 | HP | 5082-7730 |
| | TRANSISTORS | | | |
| Q1 | Si, PNP, 2N4121 | 1272-0023 | Fairchild | 2N4121 |
| Q2 | Si, PNP, MPS-U55 | 1272-0074 | Motorola | MPS-U55 |
| Q3 | Si, PNP, 2N4121 | 1272-0023 | Fairchild | 2N4121 |
| Q4 | Si, PNP, MPS-U55 | 1272-0074 | Motorola | MPS-U55 |
| Q5 | Si, PNP, 2N4121 | 1272-0023 | Fairchild | 2N4121 |
| Q6 | Si, PNP, MPS-U55 | 1272-0074 | Motorola | MPS-U55 |
| Q7 | Si, PNP, 2N4121 | 1272-0023 | Fairchild | 2N4121 |
| Q8 | Si, PNP, MPS-U55 | 1272-0074 | Motorola | MPS-U55 |
| Q9 | Si, PNP, 2N4121 | 1272-0023 | Fairchild | 2N4121 |
| Q10 | Si, PNP, MPS-U55 | 1272-0074 | Motorola | MPS-U55 |
| Q11 | Si, PNP, 2N4121 | 1272-0023 | Fairchild | 2N4121 |
| Q12 | Si, PNP, MPS-U55 | 1272-0074 | Motorola | MPS-U55 |
| Q13 | Si, PNP, 2N4121 | 1272-0023 | Fairchild | 2N4121 |
| Q14 | Si, PNP, MPS-U55 | 1272-0074 | Motorola | MPS-U55 |
| Q15 | Si, Signal, PNP, 2N3644 | 1272-0040 | Fairchild | 2N3644 |
| Q16 | Si, Signal, PNP, 2N3644 | 1272-0040 | Fairchild | 2N3644 |
| Q17 | Si, Signal, PNP, 2N3644 | 1272-0040 | Fairchild | 2N3644 |
| Q18 | Si, Signal, PNP, 2N3644 | 1272-0040 | Fairchild | 2N3644 |
| Q19 | Si, Signal, PNP, 2N3644 | 1272-0040 | Fairchild | 2N3644 |
| Q20 | Si, Signal, PNP, 2N3644 | 1272-0040 | Fairchild | 2N3644 |

FREQUENCY & LEVEL DISPLAY, 1100 (cont.)

| CKT. REF. | DESCRIPTION | CE STOCK NO. | MFR. | MFR. NO. |
|---|---|---|---|---|
| Q21 | Si, Signal, PNP, 2N3644 | 1272-0040 | Fairchild | 2N3644 |
| Q22 | Si, Signal, PNP, MPS-U55 | 1272-0074 | Motorola | MPS-U55 |
| Q23 | Si, PNP, 2N4121 | 1272-0023 | Fairchild | 2N4121 |
| Q24 | Si, Signal, PNP, MPS-U55 | 1272-0074 | Motorola | MPS-U55 |
| Q25 | Si, PNP, 2N4121 | 1272-0023 | Fairchild | 2N4121 |
| | RESISTORS | | | |
| R1 | Comp, 3.3K, ±5%, 1/4W | 1066-3325 | Allen-Bradley | CB3325 |
| R2 | Comp, 2.7K, ±5%, 1/4W | 1066-2725 | Allen-Bradley | CB2725 |
| R3 | Comp, 3.3K, ±5%, 1/4W | 1066-3325 | Allen-Bradley | CB3325 |
| R4 | Comp, 2.7K, ±5%, 1/4W | 1066-2725 | Allen-Bradley | CB2725 |
| R5 | Comp, 3.3K, ±5%, 1/4W | 1066-3325 | Allen-Bradley | CB3325 |
| R6 | Comp, 2.7K, ±5%, 1/4W | 1066-2725 | Allen-Bradley | CB2725 |
| R7 | Comp, 3.3K, ±5%, 1/4W | 1066-3325 | Allen-Bradley | CB3325 |
| R8 | Comp, 2.7K, ±5%, 1/4W | 1066-2725 | Allen-Bradley | CB2725 |
| R9 | Comp, 3.3K, ±5%, 1/4W | 1066-3325 | Allen-Bradley | CB3325 |
| R10 | Comp, 2.7K, ±5%, 1/4W | 1066-2725 | Allen-Bradley | CB2725 |
| R11 | Comp, 3.3K, ±5%, 1/4W | 1066-3325 | Allen-Bradley | CB3325 |
| R12 | Comp, 2.7K, ±5%, 1/4W | 1066-2725 | Allen-Bradley | CB2725 |
| R13 | Comp, 3.3K, ±5%, 1/4W | 1066-3325 | Allen-Bradley | CB3325 |
| R14 | Comp, 2.7K, ±5%, 1/4W | 1066-2725 | Allen-Bradley | CB2725 |
| R15 | Comp, 2.2K, ±5%, 1/4W | 1066-2225 | Allen-Bradley | CB2225 |
| R16 | Comp, 1.6K, ±5%, 1/4W | 1066-1625 | Allen-Bradley | CB1625 |
| R17 | Comp, 39Ω, ±5%, 1/4W | 1066-3905 | Allen-Bradley | CB3905 |
| R18 | Comp, 2.2K, ±5%, 1/4W | 1066-2225 | Allen-Bradley | CB2225 |
| R19 | Comp, 1.6K, ±5%, 1/4W | 1066-1625 | Allen-Bradley | CB1625 |
| R20 | Comp, 39Ω, ±5%, 1/4W | 1066-3905 | Allen-Bradley | CB3905 |
| R21 | Comp, 2.2K, ±5%, 1/4W | 1066-2225 | Allen-Bradley | CB2225 |
| R22 | Comp, 1.6K, ±5%, 1/4W | 1066-1625 | Allen-Bradley | CB1625 |
| R23 | Comp, 39Ω, ±5%, 1/4W | 1066-3905 | Allen-Bradley | CB3905 |
| R24 | Comp, 1.6K, ±5%, 1/4W | 1066-1625 | Allen-Bradley | CB1625 |
| R25 | Comp, 2.2K, ±5%, 1/4W | 1066-2225 | Allen-Bradley | CB2225 |
| R26 | Comp, 39Ω, ±5%, 1/4W | 1066-3905 | Allen-Bradley | CB3905 |
| R27 | Comp, 1.6K, ±5%, 1/4W | 1066-1625 | Allen-Bradley | CB1625 |
| R28 | Comp, 2.2K, ±5%, 1/4W | 1066-2225 | Allen-Bradley | CB2225 |
| R29 | Comp, 39Ω, ±5%, 1/4W | 1066-3905 | Allen-Bradley | CB3905 |
| R30 | Comp, 1.6K, ±5%, 1/4W | 1066-1625 | Allen-Bradley | CB1625 |
| R31 | Comp, 2.2K, ±5%, 1/4W | 1066-2225 | Allen-Bradley | CB2225 |
| R32 | Comp, 39Ω, ±5%, 1/4W | 1066-3905 | Allen-Bradley | CB3905 |
| R33 | Comp, 1.6K, ±5%, 1/4W | 1066-1625 | Allen-Bradley | CB1625 |
| R34 | Comp, 2.2K, ±5%, 1/4W | 1066-2225 | Allen-Bradley | CB2225 |
| R35 | Comp, 39Ω, ±5%, 1/4W | 1066-3905 | Allen-Bradley | CB3905 |
| R36 | Comp, 200Ω, ±5%, 1/4W | 1066-2015 | Allen-Bradley | CB2015 |
| R37 | Comp, 430Ω, ±5%, 1/4W | 1066-4315 | Allen-Bradley | CB4315 |
| R38 | Comp, 200Ω, ±5%, 1/4W | 1066-2015 | Allen-Bradley | CB2015 |
| R39 | Comp, 2.7K, ±5%, 1/4W | 1066-2725 | Allen-Bradley | CB2725 |
| R40 | Comp, 3.3K, ±5%, 1/4W | 1066-3325 | Allen-Bradley | CB3325 |
| R41 | Comp, 2.7K, ±5%, 1/4W | 1066-2725 | Allen-Bradley | CB2725 |
| R42 | Comp, 3.3K, ±5%, 1/4W | 1066-3325 | Allen-Bradley | CB3325 |

FREQUENCY & LEVEL DISPLAY, 1100 (cont.)

| CKT. REF. | DESCRIPTION | CE STOCK NO. | MFR. | MFR. NO. |
|---|---|---|---|---|
| | SWITCHES | | | |
| S1 | SW, Rtry, 1 Pole, 3 Pos, PCB, MT | 1851-0096 | Cushman | |
| S2 | SW, Rtry, 4 Pole, 10 Pos, PCB, MT | 1851-0095 | Cushman | |
| S3 | SW, Rtry, 4 Pole, 10 Pos, PCB, MT | 1851-0095 | Cushman | |
| S4 | SW, Rtry, 4 Pole, 10 Pos, PCB, MT | 1851-0095 | Cushman | |
| S5 | SW, Rtry, 4 Pole, 10 Pos, PCB, MT | 1851-0095 | Cushman | |
| S6 | SW, Rtry, 4 Pole, 10 Pos, PCB, MT | 1851-0095 | Cushman | |
| S7 | SW, Rtry, 4 Pole, 10 Pos, PCB, MT | 1851-0095 | Cushman | |
| | INTEGRATED CIRCUITS | | | |
| U1 | IC-MC7805CP, 5 Volt Rgltr | 2025-0088 | Motorola | MC7805CP |

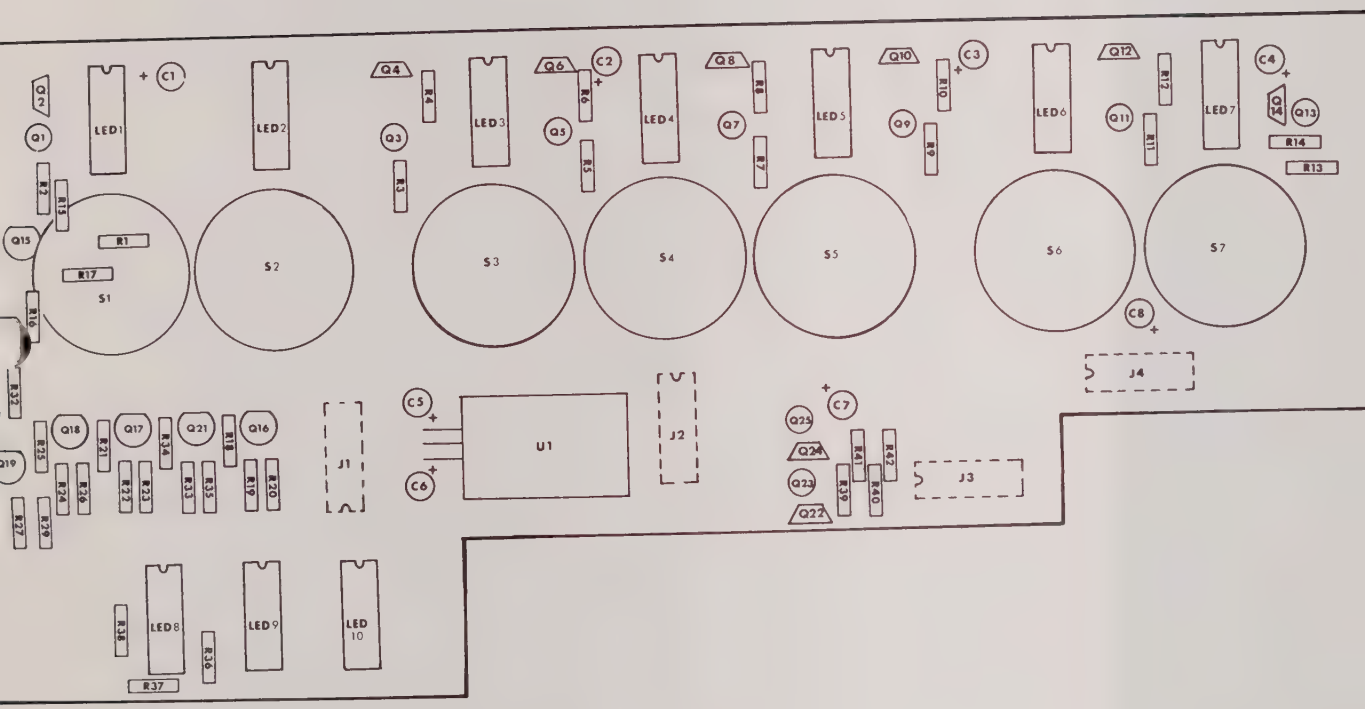
LED1
LED2
LED3
LED4
LED5
LED6
LED7
LED8
LED9
LED 10
S1
S2
S3
S4
S5
S6
S7
U1
J1
J2
J3
J4
C1
C2
C3
C4
C5
C6
C7
C8
Q1
Q2
Q3
Q4
Q5
Q6
Q7
Q8
Q9
Q10
Q11
Q12
Q13
Q14
Q15
Q16
Q17
Q18
Q19
Q21
Q22
Q23
Q24
Q25
R1
R2
R3
R4
R5
R6
R7
R8
R9
R10
R11
R12
R13
R14
R15
R16
R17
R18
R19
R20
R21
R22
R23
R24
R25
R26
R27
R29
R32
R33
R34
R35
R36
R37
R38
R39
R40
R41
R42

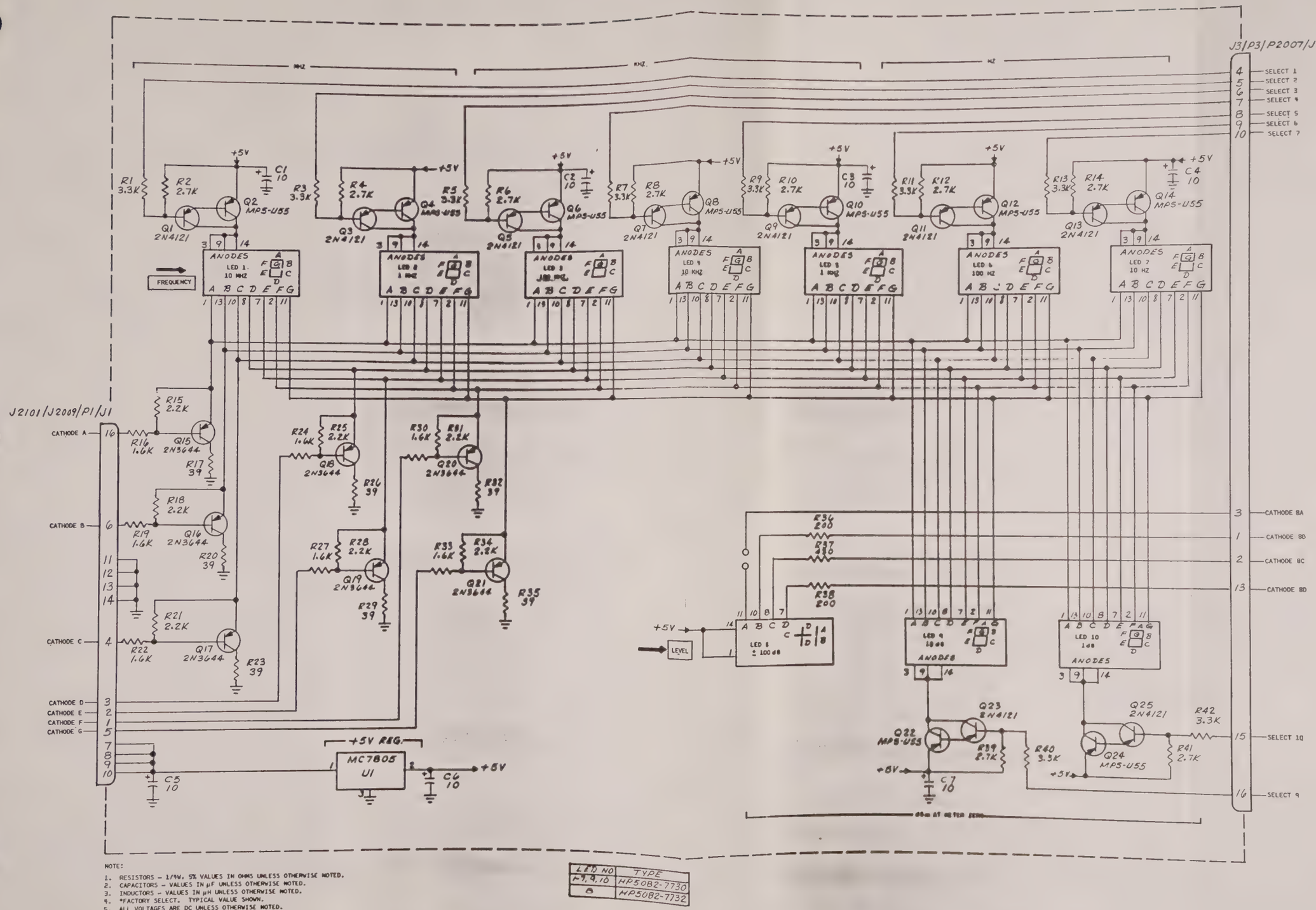


NOTE:

1. RESISTORS – 1/4W, 5% VALUES IN OHMS UNLESS OTHERWISE NOTED.
2. CAPACITORS – VALUES IN μF UNLESS OTHERWISE NOTED.
3. INDUCTORS – VALUES IN μH UNLESS OTHERWISE NOTED.
4. *FACTORY SELECT. TYPICAL VALUE SHOWN.
5. ALL VOLTAGES ARE DC UNLESS OTHERWISE NOTED.

| LED NO | TYPE |
|---|---|
| 1-9, 9, 10 | HP5082-7730 |
| 8 | HP5082-7732 |

Figure 7. Frequency & Level Display, 1100, sheet 1.

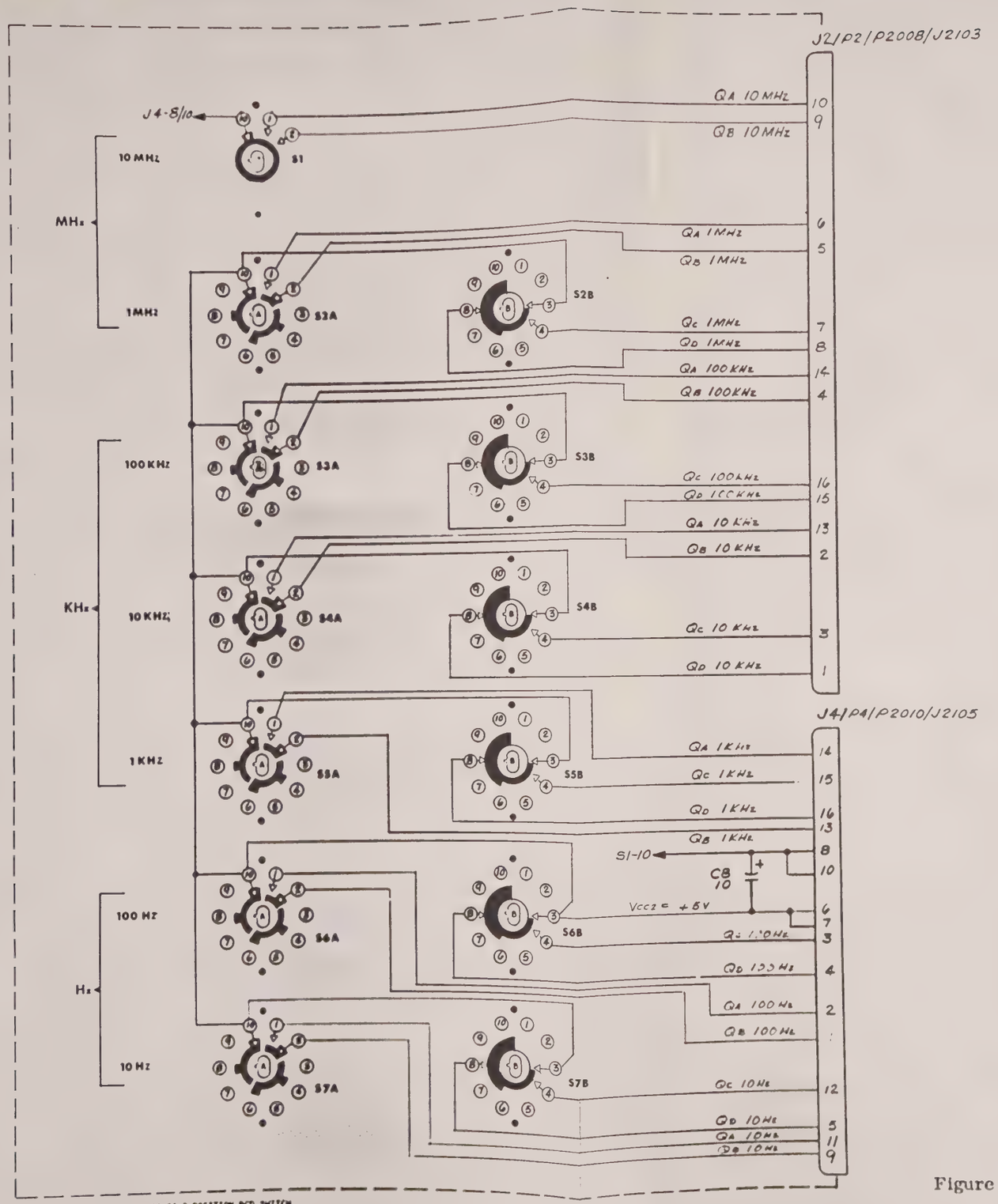


Figure 8. Frequency & Level Display, 1100, sheet 2.

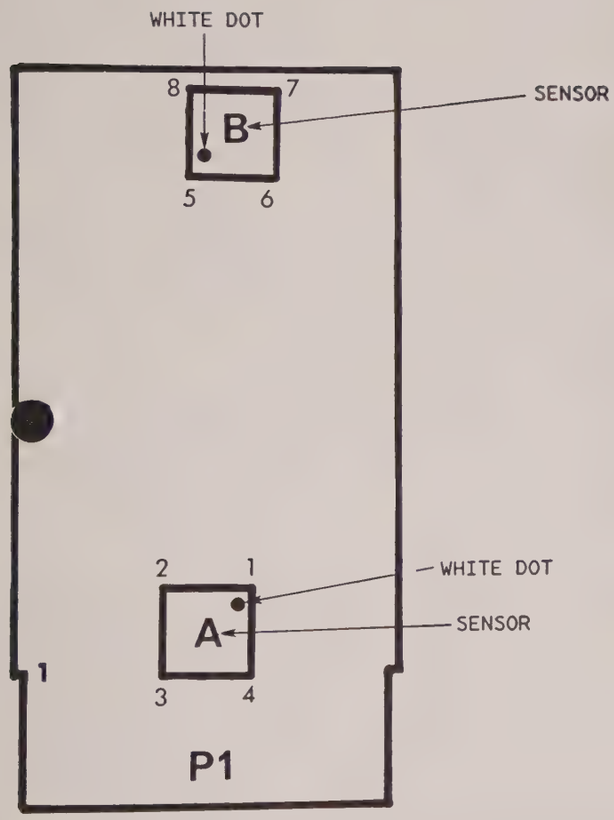


1. TRACES ON FARSIDE.

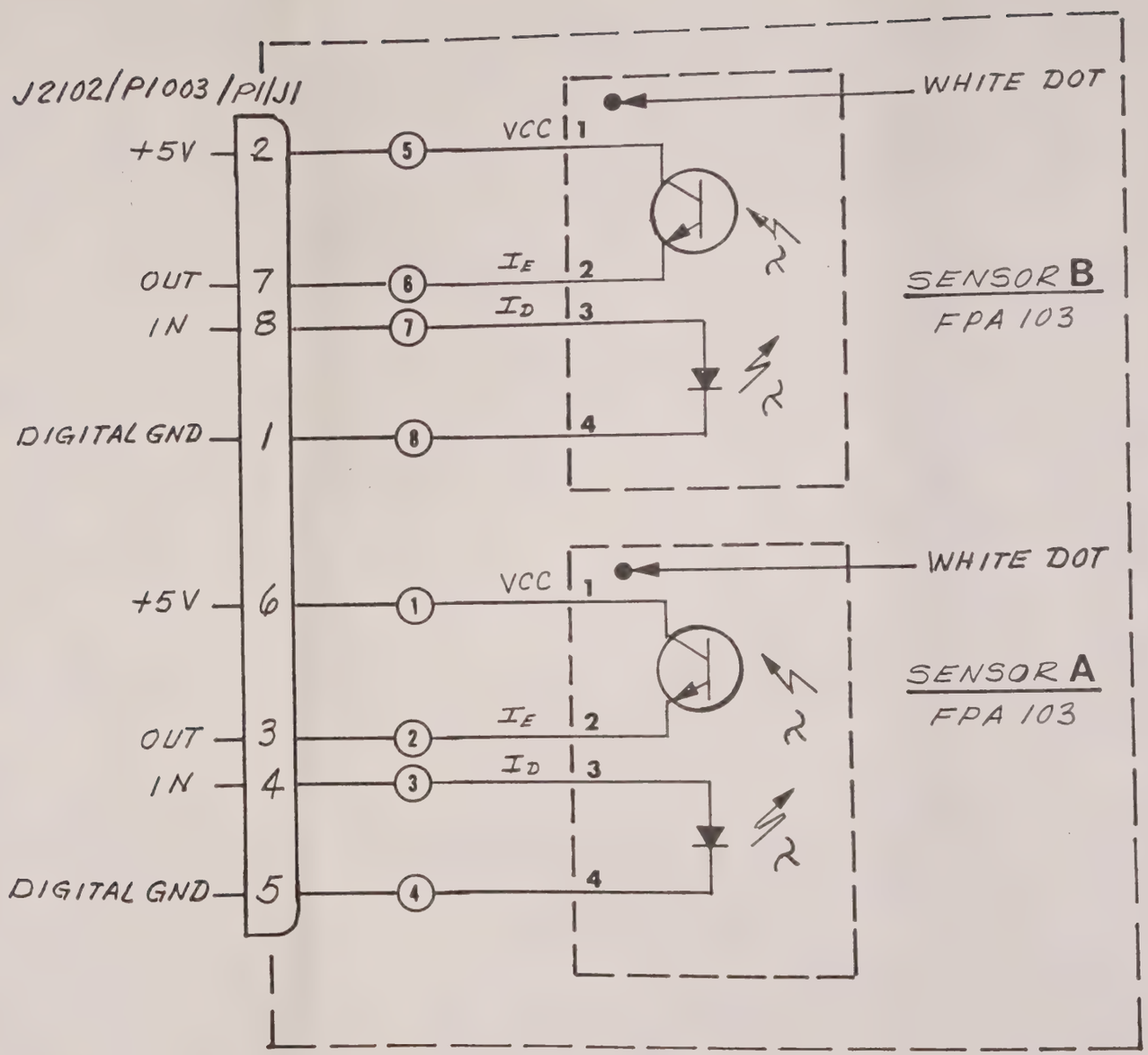


Figure 9. Shaft Encoder, 1200.

## DIGITAL INTERCONNECTION ASSEMBLY, 2100

| CKT. REF. | DESCRIPTION | CE STOCK NO. | MFR. | MFR. NO. |
|---|---|---|---|---|
| 2100 M1 | Digital Intcon Assembly | 7001-0354 | Cushman | |
| | P.C. Board | 1780-0547 | Cushman | |
| | CAPACITORS | | | |
| C1 | Cer, .05μF, +80-20%, 25V | 1005-0014 | Erie | 5855-505-Y5U0-503Z |
| C2 | Cer, .05μF, +80-20%, 25V | 1005-0014 | Erie | 5855-505-Y5U0-503Z |
| C3 | Cer, .05μF, +80-20%, 25V | 1005-0014 | Erie | 5855-505-Y5U0-503Z |
| C4 | Cer, .05μF, +80-20%, 25V | 1005-0014 | Erie | 5855-505-Y5U0-503Z |
| C5 | Cer, .05μF, +80-20%, 25V | 1005-0014 | Erie | 5855-505-Y5U0-503Z |
| | DIODES | | | |
| CR1 | Si, 1pF, Switching, 1N3062 | 1281-0080 | ITT | 1N3062 |
| CR2 | Si, 1pF, Switching, 1N3062 | 1281-0080 | ITT | 1N3062 |
| CR3 | Si, Zener, 1N4733A | 1281-0015 | Motorola | 1N4733 |
| CR4 | Si, Zener, 1N4733A | 1281-0015 | Motorola | 1N4733 |
| | CONNECTORS | | | |
| J1 | 16 Pin, Dual, Inline, IC | 2606-0006 | Cinch | 133-51-20-006 |
| J2 | 16 Pin, Dual, Inline, IC | 2606-0006 | Cinch | 133-51-20-006 |
| J3 | 16 Pin, Dual, Inline, IC | 2606-0006 | Cinch | 133-51-20-006 |
| J4 | 16 Pin, Dual, Inline, IC | 2606-0006 | Cinch | 133-51-20-006 |
| J5 | 16 Pin, Dual, Inline, IC | 2606-0006 | Cinch | 133-51-20-006 |
| J6 | 44 Cont, Dbl, Row, Dip, Term, PCB, JK | 2535-0076 | Amphenol | 225-22221-103 |
| J7 | 44 Cont, Dbl, Row, Dip, Term, PCB, JK | 2535-0076 | Amphenol | 225-22221-103 |
| J8 | 44 Cont, Dbl, Row, Dip, Term, PCB, JK | 2535-0076 | Amphenol | 225-22221-103 |
| J9 | 44 Cont, Dbl, Row, Dip, Term, PCB, JK | 2535-0076 | Amphenol | 225-22221-103 |
| J10 | 44 Cont, Dbl, Row, Dip, Term, PCB, JK | 2535-0076 | Amphenol | 225-22221-103 |
| J11 | 44 Cont, Dbl, Row, Dip, Term, PCB, JK | 2535-0076 | Amphenol | 225-22221-103 |
| J12 | 6 Pin, Locking, Mintr, JK | 2535-0074 | Molex | 09-65-1061 |
| J13 | 5 Pin, Locking, Mintr, JK | 2535-0075 | Molex | 09-65-1051 |
| J14 | 16 Pin, Dual, Inline, IC | 2606-0006 | Cinch | 133-51-20-006 |
| J15 | 16 Pin, Dual, Inline, IC | 2606-0006 | Cinch | 133-51-20-006 |
| J16 | 3 Pin, Locking, Mintr, JK | 2535-0044 | Interswitch | CU400 217V |
| J17 | Smb, 50 Ohm, JK, PC, MT, Snap-on | 2536-0071 | Cablewave | 700209 |
| J18 | Harn, Assy Digital Intcon | 7030-0115 | Cushman | |
| | INDUCTORS | | | |
| L1 | Coil, Air Core | 1596-0072 | Cushman | |
| L2 | Coil, Air Core | 1596-0072 | Cushman | |
| L3 | Coil, Air Core | 1596-0072 | Cushman | |
| L4 | Coil, Air Core | 1596-0072 | Cushman | |
| L5 | Coil, Air Core | 1596-0072 | Cushman | |
| | RESISTORS | | | |
| R1 | Comp, 75Ω, ±5%, 1/4W | 1066-7505 | Allen-Bradley | CB7505 |
| R2 | Comp, 75Ω, ±5%, 1/4W | 1066-7505 | Allen-Bradley | CB7505 |
| R3 | Comp, 75Ω, ±5%, 1/4W | 1066-7505 | Allen-Bradley | CB7505 |
| R4 | Comp, 75Ω, ±5%, 1/4W | 1066-7505 | Allen-Bradley | CB7505 |
| R5 | Comp, 220Ω, ±5%, 1/4W | 1066-2215 | Allen-Bradley | CB2215 |

DIGITAL INTERCONNECTION ASSEMBLY, 2100 (cont.)

| CKT. REF. | DESCRIPTION | CE STOCK NO. | MFR. | MFR. NO. |
|---|---|---|---|---|
| R6 | Comp, 2.7Ω, ±5%, 1/4W | 1066-0007 | Allen-Bradley | CB0007 |
| R7 | Comp, 2.7Ω, ±5%, 1/4W | 1066-0007 | Allen-Bradley | CB0007 |
| | SWITCHES | | | |
| S1 | Pb, 4 Sta, Dpdt, Mech Color Ind | 1852-0022 | Cushman | |
| S2 | Pb, 3 Sta, Dpdt, Mech Color Ind | 1852-0027 | Cushman | |
| S3 | Pb, 3 Sta, Dpdt, Mech Color Ind | 1852-0023 | Cushman | |
| | TRANSFORMERS | | | |
| T1 | 75 Ohm, to 124 Ohm, Output | 1576-0006 | Cushman | |
| T2 | 75 Ohm, to 135 Ohm, Output | 1576-0007 | Cushman | |

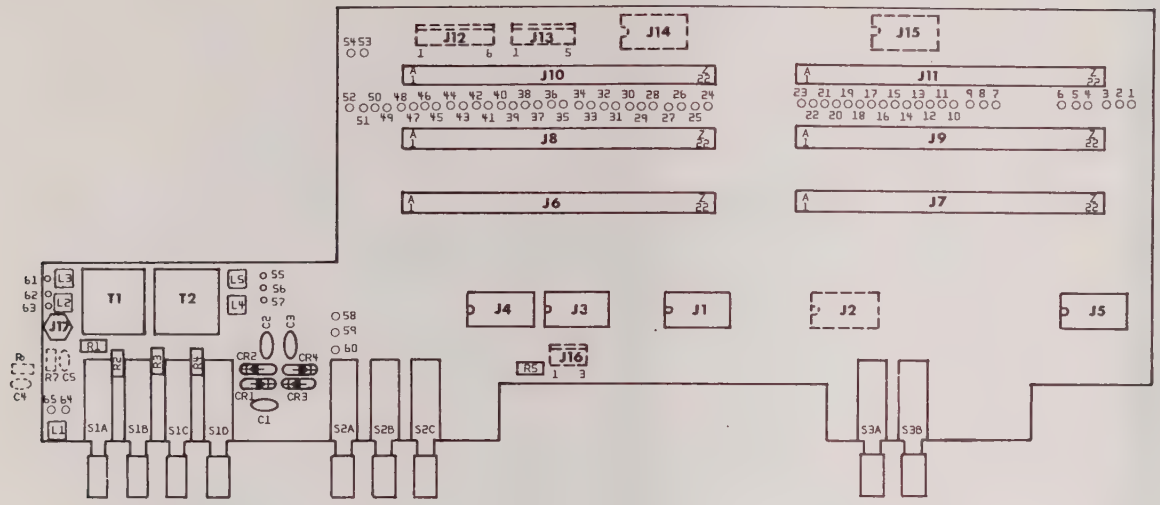


2000/2100

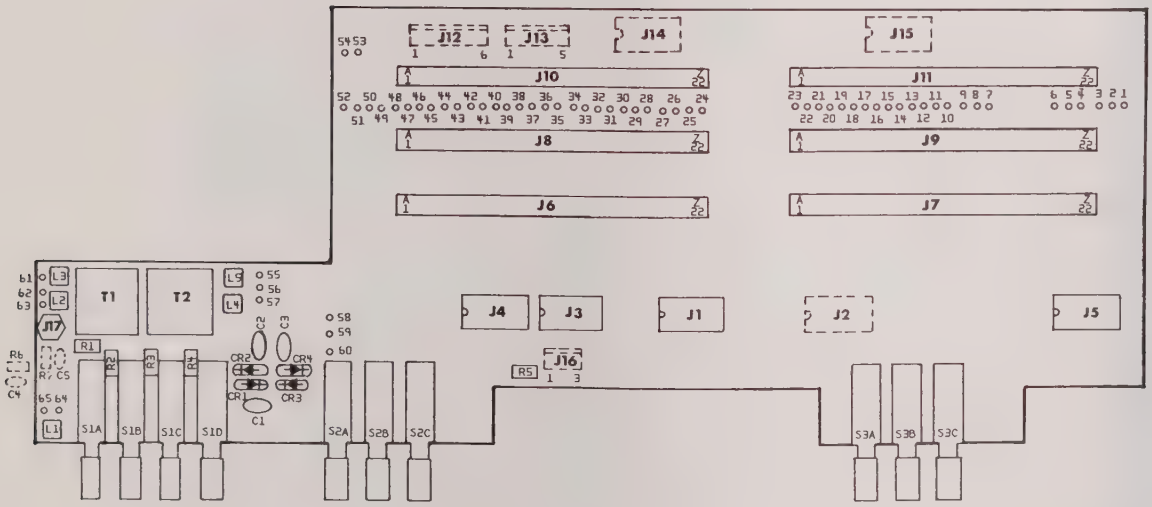


2000/2100 M1

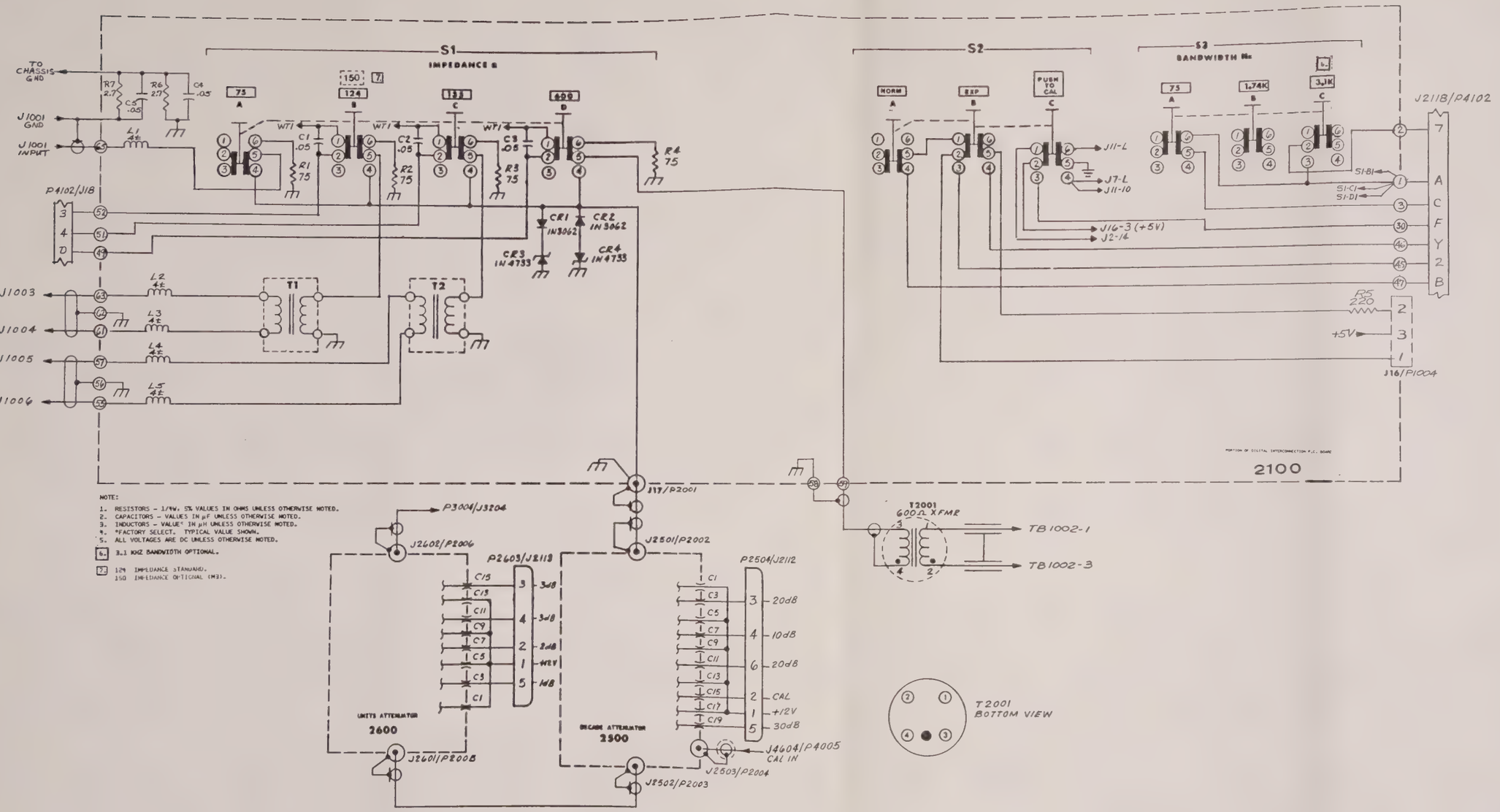


Figure 10. Digital Interconnection Diagram, 2000/2100 sheet 1

3-19/3-20

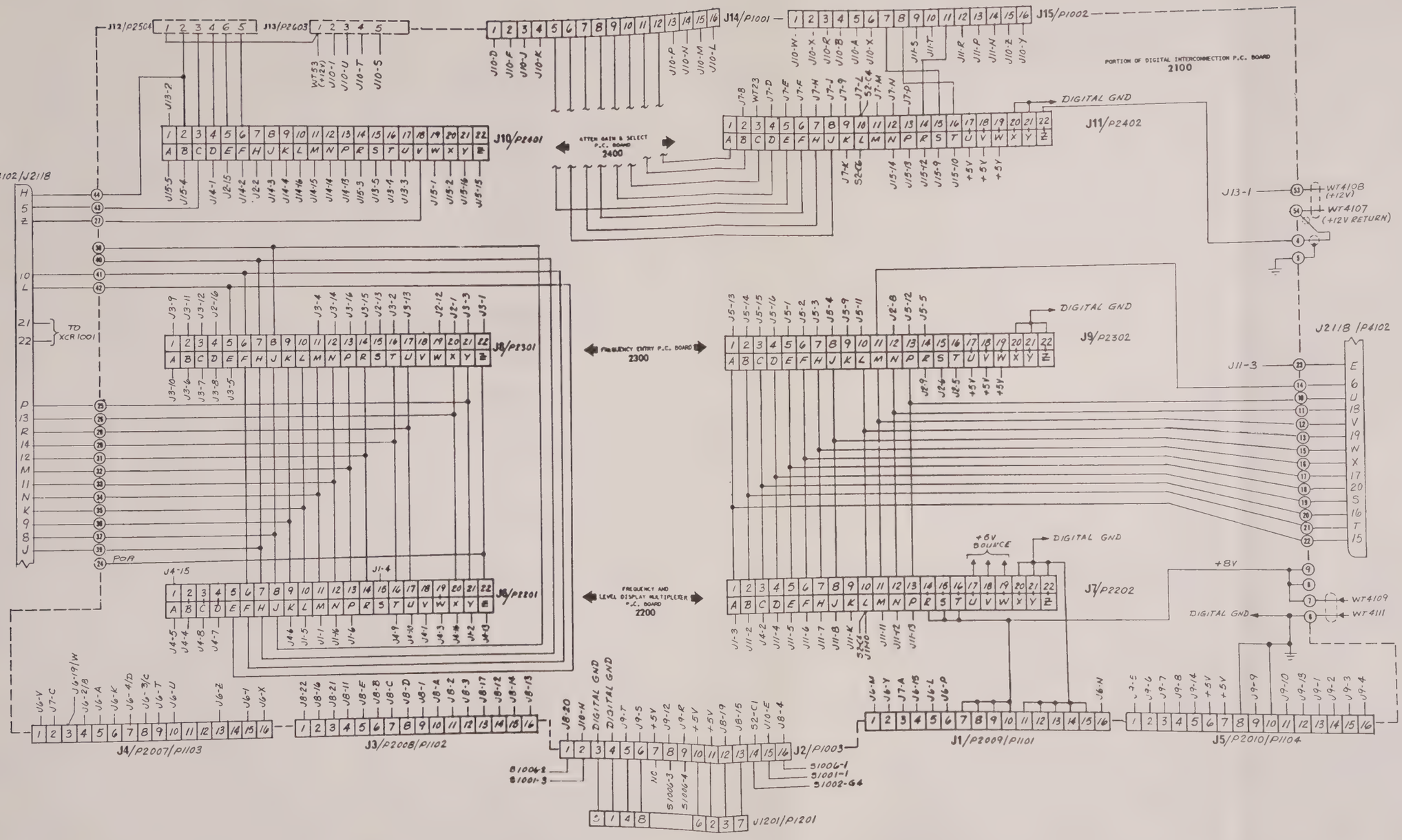


5601-0063-3

**Figure 11. Digital Interconnection Diagram, 2000/2100 sheet 2**

3-21/3-22

## FREQUENCY & LEVEL DISPLAY MULTIPLEX, 2200

| CKT. REF. | DESCRIPTION | CE STOCK NO. | MFR. | MFR. NO. |
|---|---|---|---|---|
| 2200 | Freq, & Level Display Mux | | | |
| | PBC Assy | 7001-0285 | Cushman | |
| | P.C. Board | 1780-0542 | Cushman | |
| | CAPACITORS | | | |
| C1 | Mica, 1000pF, ±5%, 100V | 1002-0015 | Elmenco | DM15-F-102J |
| C2 | Elct, 100μF, +75-10%, 12V | 1013-0011 | Sprague | 30D107G012CC5 |
| C3 | Elct, 100μF, +75-10%, 12V | 1013-0011 | Sprague | 30D107G012CC5 |
| C4 | Mica, 1000pF, ±5%, 100V | 1002-0015 | Elmenco | DM15-F-102J |
| C5 | Tant, 10μF, +50-20%, 35V | 1011-0006 | ITT | TAG-10/35-20 |
| C6 | Cer, .1μF, ±10%, 100V | 1005-0064 | Aerovox | CK06BX104K |
| C7 | Cer, .01μF, ±10%, 100V | 1005-0065 | Aerovox | CK06BX103K |
| C8 | Tant, 10μF, +50-20%, 35V | 1011-0006 | ITT | TAG-10/35-20 |
| C9 | Tant, 10μF, +50-20%, 35V | 1011-0006 | ITT | TAG-10/35-20 |
| C10 | Tant, 10μF, +50-20%, 35V | 1011-0006 | ITT | TAG-10/35-20 |
| C11 | Tant, 10μF, +50-20%, 35V | 1011-0006 | ITT | TAG-10/35-20 |
| C12 | Tant, 10μF, +50-20%, 35V | 1011-0006 | ITT | TAG-10/35-20 |
| C13 | Tant, 10μF, +50-20%, 35V | 1011-0006 | ITT | TAG-10/35-20 |
| C14 | Cer, .05μF, +80-20%, 25V | 1005-0014 | Erie | 5855-505-Y5U0-503Z |
| C15 | Tant, 10μF, +50-20%, 35V | 1011-0006 | ITT | TAG-10/35-20 |
| C16 | Tant, 10μF, +50-20%, 35V | 1011-0006 | ITT | TAG-10/35-20 |
| C17 | Cer, .05μF, +80-20%, 25V | 1005-0014 | Erie | 5855-505-Y5U0-503Z |
| | DIODES | | | |
| CR1 | Si, Signal, 1N3064 75 PIV | 1281-0013 | Teledyne | 1N3064 |
| CR2 | Si, Signal, 1N3064 75 PIV | 1281-0013 | Teledyne | 1N3064 |
| | RESISTORS | | | |
| R1 | Comp, 270Ω, ±5%, 1/4W | 1066-2715 | Allen-Bradley | CB2715 |
| R2 | Comp, 5.1K, ±5%, 1/4W | 1066-5125 | Allen-Bradley | CB5125 |
| R3 | Comp, 30K, ±5%, 1/4W | 1066-3035 | Allen-Bradley | CB3035 |
| R4 | Comp, 15K, ±5%, 1/4W | 1066-1535 | Allen-Bradley | CB1535 |
| R5 | Comp, 5.1K, ±5%, 1/4W | 1066-5125 | Allen-Bradley | CB5125 |
| R6 | Comp, 270Ω, ±5%, 1/4W | 1066-2715 | Allen-Bradley | CB2715 |
| R7 | Comp, 30K, ±5%, 1/4W | 1066-3035 | Allen-Bradley | CB3035 |
| R8 | Comp, 30K, ±5%, 1/4W | 1066-3035 | Allen-Bradley | CB3035 |
| R9 | Comp, 1K, ±5%, 1/4W | 1066-1025 | Allen-Bradley | CB1025 |
| R10 | Comp, 18K, ±5%, 1/4W | 1066-1835 | Allen-Bradley | CB1835 |
| R11 | Comp, 9.1K, ±5%, 1/4W | 1066-9125 | Allen-Bradley | CB9125 |
| R12 | Comp, 47K, ±5%, 1/4W | 1066-4735 | Allen-Bradley | CB4735 |
| R13 | Comp, 47K, ±5%, 1/4W | 1066-4735 | Allen-Bradley | CB4735 |
| R14 | Comp, 8.2K, ±5%, 1/4W | 1066-8225 | Allen-Bradley | CB8225 |
| R15 | Comp, 510Ω, ±5%, 1/4W | 1066-5115 | Allen-Bradley | CB5115 |
| R16 | Comp, 2.4K, ±5%, 1/4W | 1066-2425 | Allen-Bradley | CB2425 |
| R17 | Comp, 2.4K, ±5%, 1/4W | 1066-2425 | Allen-Bradley | CB2425 |
| R18 | Comp, 2.4K, ±5%, 1/4W | 1066-2425 | Allen-Bradley | CB2425 |
| R19 | Comp, 2.4K, ±5%, 1/4W | 1066-2425 | Allen-Bradley | CB2425 |
| R20 | Comp, 10K, ±5%, 1/4W | 1066-1035 | Allen-Bradley | CB1035 |
| | INTEGRATED CIRCUITS | | | |
| U1 | IC-SN74L03, Quad 2-Input, Pos NAND Gate | 2025-0080 | National | DM74L03N |
| U2 | IC-SN74 L03, Quad 2-Input, Pos NAND Gate | 2025-0080 | National | DM74L03N |

FREQUENCY & LEVEL DISPLAY MULTIPLEX, 2200 (cont.)

| CKT. REF. | DESCRIPTION | CE STOCK NO. | MFR. | MFR. NO. |
|---|---|---|---|---|
| U3 | IC-SN74L03, Quad 2-Input, Pos NAND Gate | 2025-0080 | National | DM74L03N |
| U4 | IC-SN74L03, Quad 2-Input, Pos NAND Gate | 2025-0080 | National | DM74L03N |
| U5 | IC-SN74L03, Quad 2-Input, Pos NAND Gate | 2025-0080 | National | DM74L03N |
| U6 | IC-SN74L03, Quad 2-Input, Pos NAND Gate | 2025-0080 | National | DM74L03N |
| U7 | IC-SN74L03, Quad 2-Input, Pos NAND Gate | 2025-0080 | National | DM74L03N |
| U8 | IC-SN74L04N, Hex Inverter | 2025-0038 | T.I. | SN74L04N |
| U9 | IC-SN74L47N | 2025-0078 | T.I. | SN74L47N |
| U10 | IC-SN74L03, Quad 2-Input, Pos NAND Gate | 2025-0080 | National | DM74L03N |
| U11 | IC-SN74L03, Quad 2-Input, Pos NAND Gate | 2025-0080 | National | DM74L03N |
| U12 | IC-SN74L04N, Hex Inverter | 2025-0038 | T.I. | SN74L04N |
| U13 | IC-SN74145SN | 2025-0074 | T.I. | SN74145N |
| U14 | IC-SN7490N, Decade Counter | 2025-0002 | T.I. | SN7490N |
| U15 | IC-SN74L123N, Dual Mono Stable MV W/CLR | 2025-0107 | T.I. | SN74L123N |
| U16 | IC-SN74L123N, Dual Mono Stable MV W/CLR | 2025-0107 | T.I. | SN74L123N |
| U17 | IC-SN74LS04, Hex Inverters | 2025-0084 | T.I. | SN74LS04N |
| U18 | IC-SN74L00N, Quad 2, Input Pos NAND Gate | 2025-0036 | T.I. | SN74L00N |
| U19 | IC-SN7403N, Quad 2-Input Pos NAND Gate | 2025-0104 | T.I. | SN7403N |
| U20 | IC-MC7805, CP, 5 Volt Rgltr | 2025-0088 | Motorola | MC-7805CP |
| | TRANSISTOR | | | |
| Q1 | Si, NPN, 2N3904 | 1272-0032 | Motorola | 2N3904 |
| Q2 | Si, PNP, 2N4121 | 1272-0023 | Fairchild | 2N4121 |
| Q3 | Si, PNP, 2N4121 | 1272-0023 | Fairchild | 2N4121 |

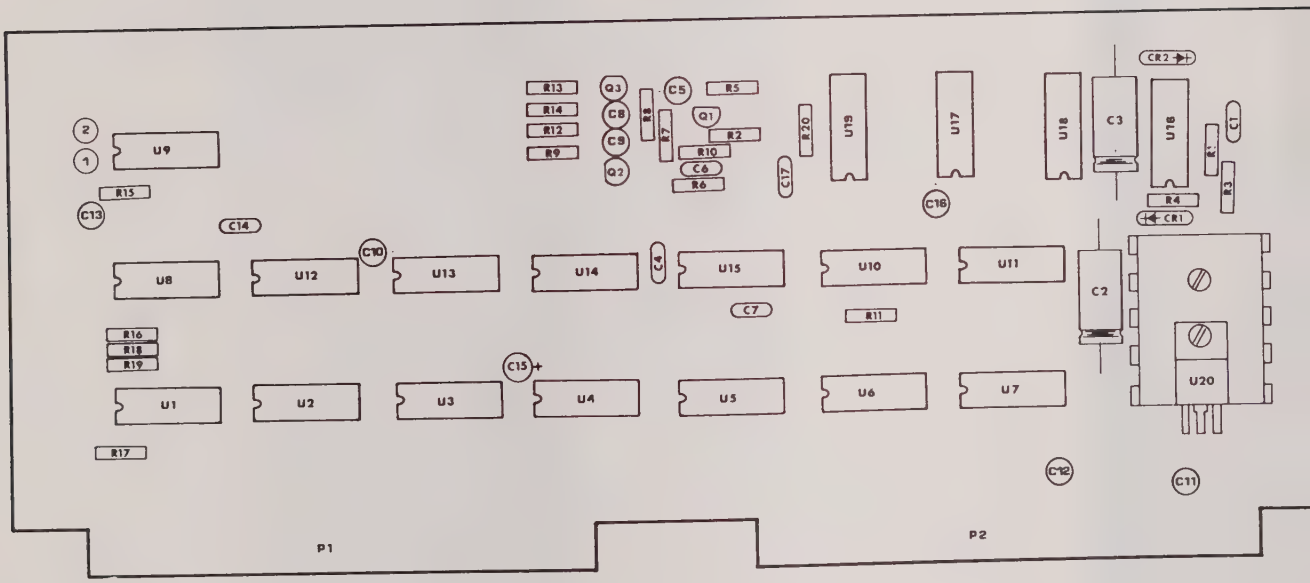
2
1
U9
R15
C13
C14
C10
U8
U12
U13
U14
C4
U15
U10
U11
C7
R11
R16
R18
R19
C15
U1
U2
U3
U4
U5
U6
U7
R17
R13
R14
R12
R9
Q3
C8
C9
Q2
C5
R8
R7
Q1
R5
R2
R10
C6
R6
C17
R20
U19
U17
C16
U18
C3
U16
CR2
C1
R1
R3
R4
CR1
C2
U20
C12
C11
P1
P2

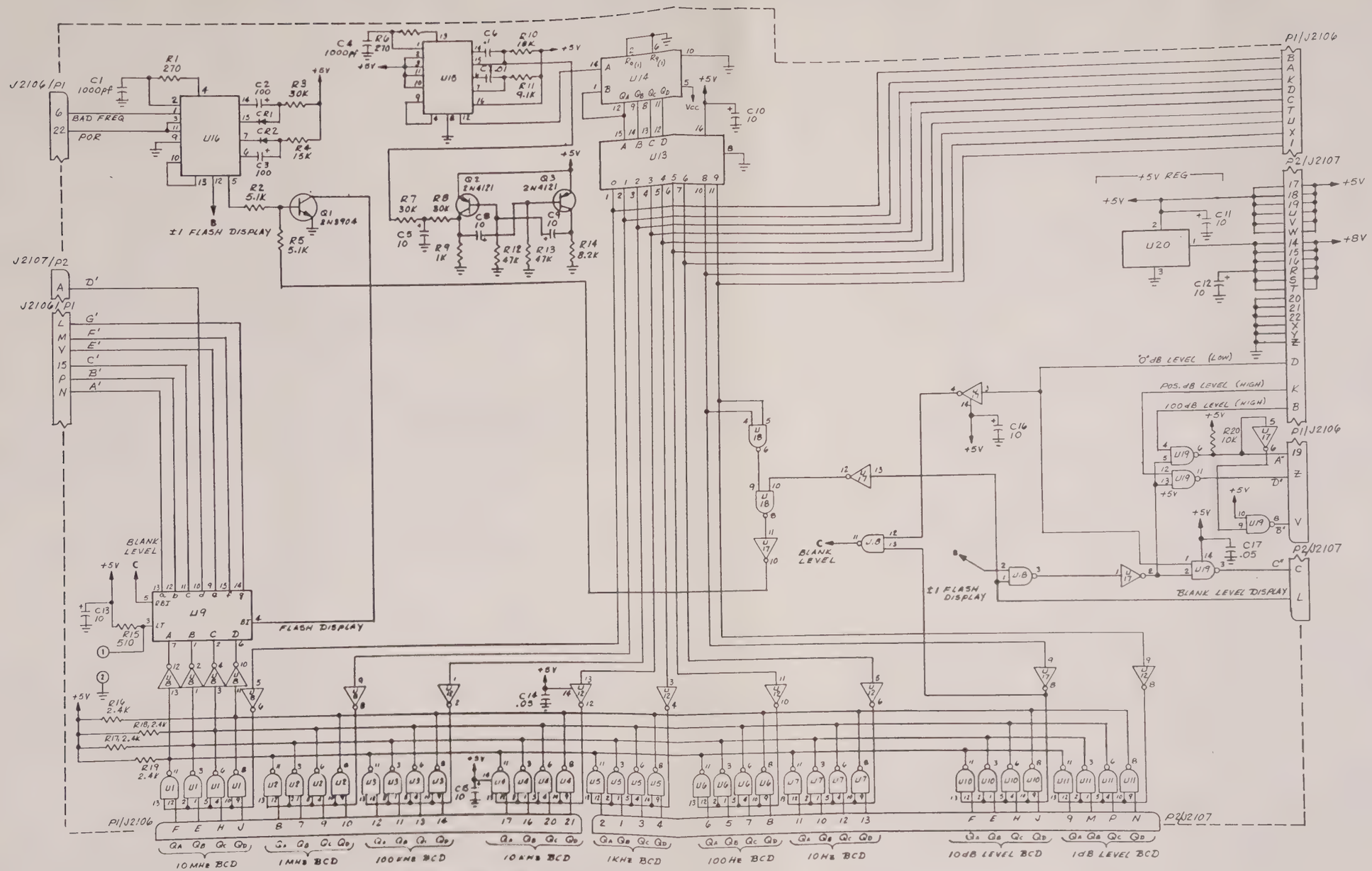


| U NO. | TYPE | VCC | GND |
|---|---|---|---|
| 14 | SN7490 | 5 | 10 |
| 15, 16 | SN74L123 | 14 | 8 |
| 17 | SN74LS04 | 14 | 7 |
| 18 | SN74L00N | 14 | 7 |
| 20 | MC7805CP | | |

NOTE:
1. RESISTORS – 1/4W, 5% VALUES IN OHMS UNLESS OTHERWISE NOTED.
2. CAPACITORS – VALUES IN μF UNLESS OTHERWISE NOTED.
3. INDUCTORS – VALUES IN μH UNLESS OTHERWISE NOTED.
4. *FACTORY SELECT. TYPICAL VALUE SHOWN.
5. ALL VOLTAGES ARE DC UNLESS OTHERWISE NOTED.
6. ALL DIODES ARE IN914 UNLESS OTHERWISE NOTED.

5601-0063-3

Figure 12. Frequency & Level Display Multiplex, 2200.

## FREQUENCY ENTRY, 2300

| CKT. REF. | DESCRIPTION | CE STOCK NO. | MFR. | MFR. NO. |
|---|---|---|---|---|
| 2300 | Freq Entry, PCB Assy | 7001-0286 | Cushman | |
| | P.C. Board | 1780-0545 | Cushman | |
| | CAPACITORS | | | |
| C1 | Elct, 100 µF, +75-10%, 12V | 1013-0011 | Sprague | 30D1075012CC5 |
| C2 | Cer, .01µF, +80-20%, 25V | 1005-0013 | Erie | 5835-512-Y5U-103Z |
| C3 | Cer, .05µF, +80-20%, 25V | 1005-0014 | Erie | 5855-505-Y5U0-5037 |
| C4 | Cer, .002µF, ±20%, 500V | 1005-0003 | Erie | 831-596-Z5U-202M |
| C5 | Tant, 10µF, +50 -20%, 35V | 1011-0006 | ITT | Tag 10/35-20 |
| C6 | Cer, .05µF, +80-20%, 25V | 1005-0014 | Erie | 5855-505-Y5U0-5037 |
| C7 | Cer, .01µF, +80-20%, 25V | 1005-0013 | Erie | 5835-512-Y5U-103Z |
| C8 | Cer, .002µF, ±20%, 500V | 1005-0003 | Erie | 831-596-Z5U-202M |
| C9 | Cer, .002µF, ±20%, 500V | 1005-0003 | Erie | 831-596-Z5U-202M |
| C10 | Elct, 1µF, ±10%, 25V | 1013-0004 | Sprague | 30D105G025BA5 |
| C11 | Elct, 100µF, +75-10%, 12V | 1013-0011 | Sprague | 30D1075012CC5 |
| C12 | Tant, 10µF, +50 -20%, 35V | 1011-0006 | ITT | Tag 10/35-20 |
| C13 | Cer, .05µF, +80-20%, 25V | 1005-0014 | Erie | 5855-505-Y5U0-5037 |
| C14 | Cer, .05µF, +80-20%, 25V | 1005-0014 | Erie | 5855-505-Y5U0-5037 |
| C15 | Tant, 10µF, +50 -20%, 35V | 1011-0006 | ITT | Tag 10/35-20 |
| C16 | Tant, 10µF, +50 -20%, 35V | 1011-0006 | ITT | Tag 10/35-20 |
| C17 | Cer, .05µF, +80-20%, 25V | 1005-0014 | Erie | 5855-505-Y5U0-5037 |
| C18 | Tant, 10µF, +50 -20%, 35V | 1011-0006 | ITT | Tag 10/35-20 |
| C19 | Tant, 10µF, +50 -20%, 35V | 1011-0006 | ITT | Tag 10/35-20 |
| C20 | Cer, .05µF, +80-20%, 25V | 1005-0014 | Erie | 5855-505-Y5U0-5037 |
| C21 | Tant, 10µF, +50 -20%, 35V | 1011-0006 | ITT | Tag 10/35-20 |
| | DIODE | | | |
| CR1 | HP2800 | 1283-0001 | HPA | 5082-2800 |
| | TRANSISTORS | | | |
| Q1 | Si, NPN, 2N3904 | 1272-0032 | Motorola | 2N3904 |
| Q2 | Si, NPN, 2N3904 | 1272-0032 | Motorola | 2N3904 |
| | RESISTOR | | | |
| R1 | Comp, 20K, ±5%, 1/4W | 1066-2035 | Allen-Bradley | CB2035 |
| R2 | Comp, 8.2K, ±5%, 1/4W | 1066-8225 | Allen-Bradley | CB8225 |
| R3 | Comp, 510Ω, ±5%, 1/4W | 1066-5115 | Allen-Bradley | CB5115 |
| R4 | Comp, 2K, ±5%, 1/4W | 1066-2025 | Allen-Bradley | CB2025 |
| R5 | Comp, 100Ω, ±5%, 1/4W | 1066-1015 | Allen-Bradley | CB1015 |
| R6 | Comp, 100Ω, ±5%, 1/4W | 1066-1015 | Allen-Bradley | CB1015 |
| R7 | Comp, 510Ω, ±5%, 1/4W | 1066-5115 | Allen-Bradley | CB5115 |
| R8 | Comp, 2K, ±5%, 1/4W | 1066-2025 | Allen-Bradley | CB2025 |
| R9 | Comp, 5.1K, ±5%, 1/4W | 1066-5125 | Allen-Bradley | CB5125 |
| R10 | Comp, 5.1K, ±5%, 1/4W | 1066-5125 | Allen-Bradley | CB5125 |
| R11 | Comp, 5.1K, ±5%, 1/4W | 1066-5125 | Allen-Bradley | CB5125 |
| R12 | Comp, 5.1K, ±5%, 1/4W | 1066-5125 | Allen-Bradley | CB5125 |
| R13 | Comp, 3.3K, ±5%, 1/4W | 1066-3325 | Allen-Bradley | CB3325 |
| R14 | Comp, 1.3K, ±5%, 1/4W | 1066-1325 | Allen-Bradley | CB1325 |
| R15 | Comp, 2K, ±5%, 1/4W | 1066-2025 | Allen-Bradley | CB2025 |
| R16 | Comp, 3.3K, ±5%, 1/4W | 1066-3325 | Allen-Bradley | CB3325 |
| R17 | Comp, 5.1K, ±5%, 1/4W | 1066-5125 | Allen-Bradley | CB5125 |
| R18 | Comp, 5.1K, ±5%, 1/4W | 1066-5125 | Allen-Bradley | CB5125 |
| R19 | Comp, 12K, ±5%, 1/4W | 1066-1235 | Allen-Bradley | CB1235 |
| R20 | Comp, 1.5K, ±5%, 1/4W | 1066-1525 | Allen-Bradley | CB1525 |

FREQUENCY ENTRY, 2300 (cont.)

| CKT. REF. | DESCRIPTION | CE STOCK NO. | MFR. | MFR. NO. |
|---|---|---|---|---|
| R21 | Comp, 750Ω, ±5%, 1/4W | 1066-7515 | Allen-Bradley | CB7515 |
| R22 | Comp, 1.5K, ±5%, 1/4W | 1066-1525 | Allen-Bradley | CB1525 |
| R23 | Comp, 1.5K, ±5%, 1/4W | 1066-1525 | Allen-Bradley | CB1525 |
| R24 | Comp, 1.5K, ±5%, 1/4W | 1066-1525 | Allen-Bradley | CB1525 |
| R25 | Comp, 1.5K, ±5%, 1/4W | 1066-1525 | Allen-Bradley | CB1525 |
| R26 | Comp, 750Ω, ±5%, 1/4W | 1066-7515 | Allen-Bradley | CB7515 |
| R27 | Comp, 1.5K, ±5%, 1/4W | 1066-1525 | Allen-Bradley | CB1525 |
| R28 | Comp, 1.5K, ±5%, 1/4W | 1066-1525 | Allen-Bradley | CB1525 |
| R29 | Comp, 1.5K, ±5%, 1/4W | 1066-1525 | Allen-Bradley | CB1525 |
| R30 | Comp, 1.5K, ±5%, 1/4W | 1066-1525 | Allen-Bradley | CB1525 |
| R31 | Comp, 750Ω, ±5%, 1/4W | 1066-7515 | Allen-Bradley | CB7515 |
| R32 | Comp, 1.5K, ±5%, 1/4W | 1066-1525 | Allen-Bradley | CB1525 |
| R33 | Comp, 1.5K, ±5%, 1/4W | 1066-1525 | Allen-Bradley | CB1525 |
| R34 | Comp, 1.5K, ±5%, 1/4W | 1066-1525 | Allen-Bradley | CB1525 |
| R35 | Comp, 1.5K, ±5%, 1/4W | 1066-1525 | Allen-Bradley | CB1525 |
| R36 | Comp, 2K, ±5%, 1/4W | 1066-2025 | Allen-Bradley | CB2025 |
| R37 | Comp, 47K, ±5%, 1/4W | 1066-4735 | Allen-Bradley | CB4735 |
| R38 | Comp, 1.5K, ±5%, 1/4W | 1066-1525 | Allen-Bradley | CB1525 |
| R39 | Comp, 1.5K, ±5%, 1/4W | 1066-1525 | Allen-Bradley | CB1525 |
| R40 | Comp, 1.5K, ±5%, 1/4W | 1066-1525 | Allen-Bradley | CB1525 |
| R41 | Comp, 1.5K, ±5%, 1/4W | 1066-1525 | Allen-Bradley | CB1525 |
| R42 | Comp, 1.5K, ±5%, 1/4W | 1066-1525 | Allen-Bradley | CB1525 |
| R43 | Comp, 1.5K, ±5%, 1/4W | 1066-1525 | Allen-Bradley | CB1525 |
| R44 | Comp, 1.5K, ±5%, 1/4W | 1066-1525 | Allen-Bradley | CB1525 |
| R45 | Comp, 1.5K, ±5%, 1/4W | 1066-1525 | Allen-Bradley | CB1525 |
| R46 | Comp, 1.5K, ±5%, 1/4W | 1066-1525 | Allen-Bradley | CB1525 |
| R47 | Comp, 1.5K, ±5%, 1/4W | 1066-1525 | Allen-Bradley | CB1525 |
| R48 | Comp, 1.5K, ±5%, 1/4W | 1066-1525 | Allen-Bradley | CB1525 |
| R49 | Comp, 1.5K, ±5%, 1/4W | 1066-1525 | Allen-Bradley | CB1525 |
| R50 | Comp, 10K, ±5%, 1/4W | 1066-1035 | Allen-Bradley | CB1035 |
| R51 | Comp, 10K, ±5%, 1/4W | 1066-1035 | Allen-Bradley | CB1035 |
| R52 | Comp, 10K, ±5%, 1/4W | 1066-1035 | Allen-Bradley | CB1035 |
| R53 | Comp, 10K, ±5%, 1/4W | 1066-1035 | Allen-Bradley | CB1035 |
| R54 | Comp, 10K, ±5%, 1/4W | 1066-1035 | Allen-Bradley | CB1035 |
| | INTEGRATED CIRCUITS | | | |
| U1 | IC, Quad 2-Input Pos NOR Gate | 2025-0037 | T.I. | SN74L02N |
| U2 | IC, SN74L192N | 2025-0081 | T.I. | SN74L192N |
| U3 | IC, Quad 2-Input Pos NAND Gate | 2025-0080 | T.I. | SN74L03N |
| U4 | IC, Quad 2-Input Pos NOR Gate | 2025-0037 | T.I. | SN74L02N |
| U5 | IC, SN74L192N | 2025-0081 | T.I. | SN74L192N |
| U6 | IC, SN74L192N | 2025-0081 | T.I. | SN74L192N |
| U7 | IC, SN74L192N | 2025-0081 | T.I. | SN74L192N |
| U8 | IC, SN74L192N | 2025-0081 | T.I. | SN74L192N |
| U9 | IC, SN74L192N | 2025-0081 | T.I. | SN74L192N |
| U10 | IC, SN74L192N | 2025-0081 | T.I. | SN74L192N |
| U11 | IC-SN7414 Hex | 2025-0105 | T.I. | SN7414N |
| U12 | IC Quad 2-Input Pos NAND Gate | 2025-0036 | T.I. | SN74L00N |
| U13 | IC Quad 2-Input Pos NAND Gate | 2025-0036 | T.I. | SN74L00N |
| U14 | IC Quad 2-Input Pos NAND Gate | 2025-0036 | T.I. | SN74L00N |
| U15 | IC-SN74L04N Hex Inverter | 2025-0036 | T.I. | SN74L00N |
| U16 | IC Quad 2-Input Pos NAND Gate | 2025-0036 | T.I. | SN74L00N |
| U17 | IC-SN74L121N | 2025-0081 | T.I. | SN74L192N |
| U18 | IC Quad 2-Input Pos NOR Gate | 2025-0037 | T.I. | SN74L02N |
| U19 | IC Quad 2-Input Pos NAND Gate | 2025-0036 | T.I. | SN74L00N |
| U20 | IC-MC 8601P, Monostable Multi | 2025-0053 | Motorola | MC8601P |

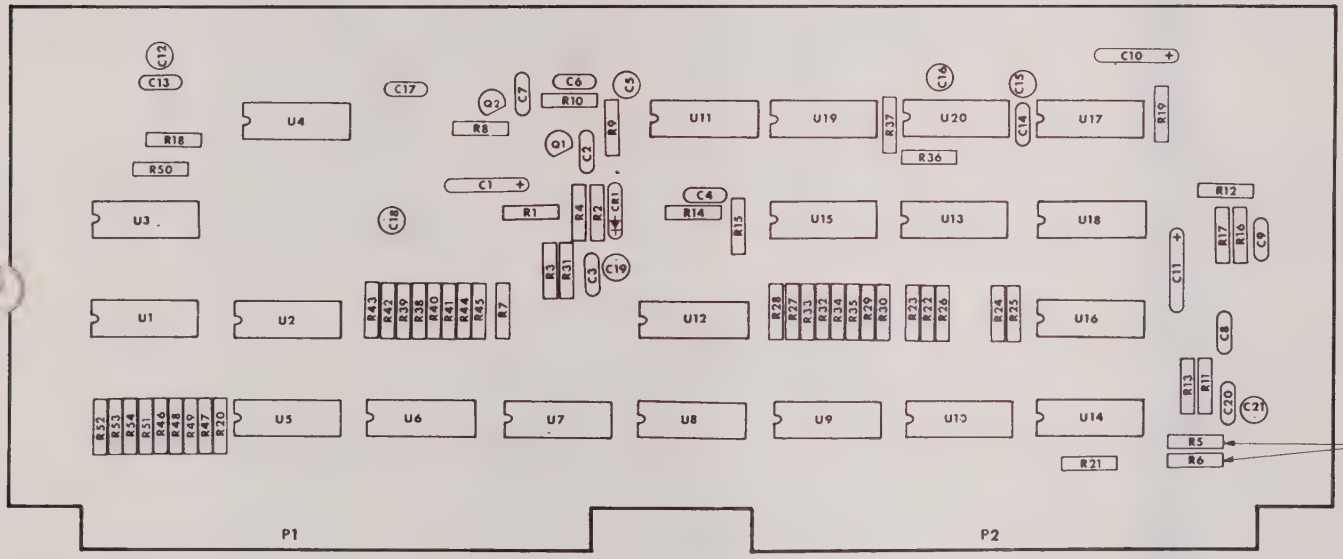


1. FACTORY SELECT VALUE.

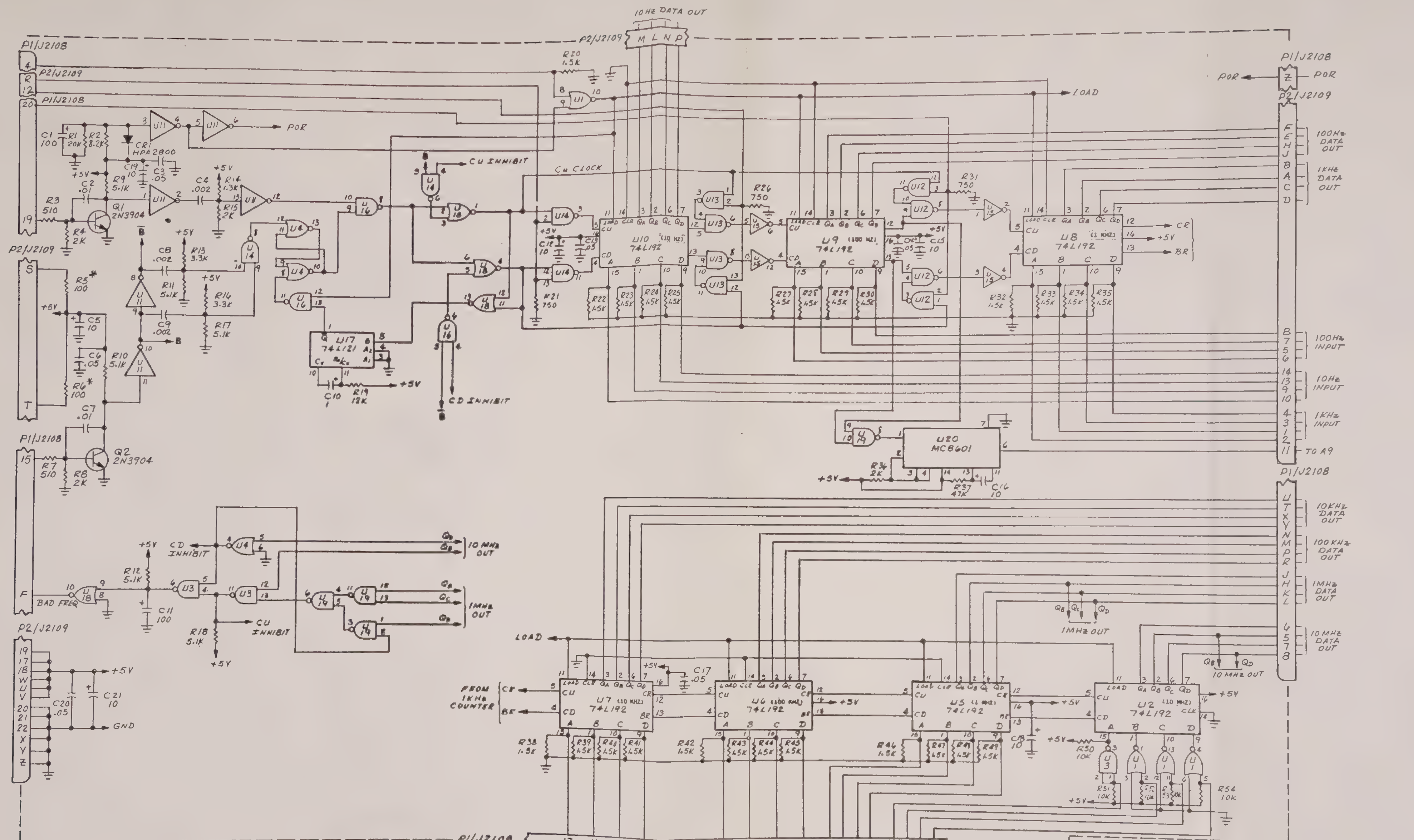


NOTE:

1. RESISTORS - 1/4W, 5% VALUES IN OHMS UNLESS OTHERWISE NOTED.
2. CAPACITORS - VALUES IN μF UNLESS OTHERWISE NOTED.
3. INDUCTORS - VALUES IN μH UNLESS OTHERWISE NOTED.
4. *FACTORY SELECT. TYPICAL VALUE SHOWN.
5. ALL VOLTAGES ARE DC UNLESS OTHERWISE NOTED.

| U NO | TYPE |
|---|---|
| U1,4,18 | [illegible] |
| U2,5,6,7,8,9,10 | SN74L192 |
| U3 | [illegible] |
| U11 | SN7414 |
| U12,13,14,16,19 | SN74L00 |
| U15 | [illegible] |
| U17 | SN74L121 |

5601-0063-3

Figure 13. Frequency Entry, 2300.

ATTENUATOR & GAIN SELECT, 2400

| CKT. REF. | DESCRIPTION | CE STOCK NO. | MFR. | MFR. NO. |
|---|---|---|---|---|
| 2400 | Attenuator and Grain Select P.C. Board | 7001-0287<br>1780-0548 | Cushman<br>Cushman | |
| | CAPACITORS | | | |
| C1 | Cer, .05μF, +80-20%, 25V | 1005-0014 | Erie | 585-505-Y5U0-503Z |
| C2 | Cer, .05μF, +80-20%, 25V | 1005-0014 | Erie | 585-505-Y5U0-503Z |
| C3 | Cer, .05μF, +80-20%, 25V | 1005-0014 | Erie | 585-505-Y5U0-503Z |
| C4 | Cer, .05μF, +80-20%, 25V | 1005-0014 | Erie | 585-505-Y5U0-503Z |
| C5 | Tant, 10μF, +50-20%, 35V | 1011-0006 | ITT | TAG-10/35-20 |
| C6 | Cer, .05μF, +80-20%, 25V | 1005-0014 | Erie | 585-505-Y5U0-503Z |
| C7 | Tant, 10μF, +50-20%, 35V | 1011-0006 | ITT | TAG-10/35-20 |
| C8 | Cer, .05μF, +80-20%, 25V | 1005-0014 | Erie | 585-505-Y5U0-503Z |
| C9 | Cer, .05μF, +80-20%, 25V | 1005-0014 | Erie | 585-505-Y5U0-503Z |
| C10 | Elect, 100μF, +75-10%, 12V | 1013-0011 | Sprague | 30D107G012CC5 |
| C11 | Elect, 100μF, 10%, 25V | 1013-0003 | Sprague | 30D107G025DD5 |
| | DIODES | | | |
| CR1 | Si, Signal, 1N3064, 75 PIV | 1281-0013 | Teledyne | 1N3064 |
| CR2 | Si, Signal, 1N3064, 75 PIV | 1281-0013 | Teledyne | 1N3064 |
| CR3 | Si, Signal, 1N3064, 75 PIV | 1281-0013 | Teledyne | 1N3064 |
| CR4 | Si, Signal, 1N3064, 75 PIV | 1281-0013 | Teledyne | 1N3064 |
| CR5 | Si, Signal, 1N3064, 75 PIV | 1281-0013 | Teledyne | 1N3064 |
| CR6 | Si, Signal, 1N3064, 75 PIV | 1281-0013 | Teledyne | 1N3064 |
| CR7 | Si, Signal, 1N3064, 75 PIV | 1281-0013 | Teledyne | 1N3064 |
| CR8 | Si, Signal, 1N3064, 75 PIV | 1281-0013 | Teledyne | 1N3064 |
| CR9 | Si, Signal, 1N3064, 75 PIV | 1281-0013 | Teledyne | 1N3064 |
| CR10 | Si, Signal, 1N3064, 75 PIV | 1281-0013 | Teledyne | 1N3064 |
| CR11 | Si, Signal, 1N3064, 75 PIV | 1281-0013 | Teledyne | 1N3064 |
| CR12 | Si, Signal, 1N3064, 75 PIV | 1281-0013 | Teledyne | 1N3064 |
| CR13 | Si, Signal, 1N3064, 75 PIV | 1281-0013 | Teledyne | 1N3064 |
| CR14 | Si, Signal, 1N3064, 75 PIV | 1281-0013 | Teledyne | 1N3064 |
| CR15 | Si, Signal, 1N3064, 75 PIV | 1281-0013 | Teledyne | 1N3064 |
| CR16 | Si, Signal, 1N3064, 75 PIV | 1281-0013 | Teledyne | 1N3064 |
| | INDUCTOR | | | |
| L1 | RF Choke, 1000μH, ±5% | 1585-0020 | Delevan | 2500-28 |
| | TRANSISTORS | | | |
| Q1 | Si, NPN, 2N3904 | 1272-0032 | Motorola | 2N3904 |
| Q2 | Si, NPN, 2N3904 | 1272-0032 | Motorola | 2N3904 |
| Q3 | Si, NPN, 2N3904 | 1272-0032 | Motorola | 2N3904 |
| Q4 | Si, NPN, 2N3904 | 1272-0032 | Motorola | 2N3904 |
| Q5 | Si, NPN, 2N3904 | 1272-0032 | Motorola | 2N3904 |
| Q6 | Si, NPN, 2N3904 | 1272-0032 | Motorola | 2N3904 |
| Q7 | Si, NPN, 2N3904 | 1272-0032 | Motorola | 2N3904 |
| Q8 | Si, NPN, 2N3904 | 1272-0032 | Motorola | 2N3904 |
| Q9 | Si, NPN, 2N3904 | 1272-0032 | Motorola | 2N3904 |
| Q10 | Si, PNP, 2N3906 | 1272-0037 | Motorola | 2N3906 |
| Q11 | Si, PNP, 2N3906 | 1272-0037 | Motorola | 2N3906 |

ATTENUATOR & GAIN SELECT, 2400 (cont.)

| CKT. REF. | DESCRIPTION | CE STOCK NO. | MFR. | MFR. NO. |
|---|---|---|---|---|
| | RESISTORS | | | |
| R1 | Comp, 10K, ±5%, 1/4W | 1066-1035 | Allen-Bradley | CB1035 |
| R2 | Comp, 10K, ±5%, 1/4W | 1066-1035 | Allen-Bradley | CB1035 |
| R3 | Comp, 680Ω, ±5% 1/4W | 1066-6815 | Allen-Bradley | CB6815 |
| R4 | Comp, 750Ω, ±5%, 1/4W | 1066-7515 | Allen-Bradley | CB7515 |
| R5 | Comp, 5.1K, ±5%, 1/4W | 1066-5125 | Allen-Bradley | CB5125 |
| R6 | Comp, 5.1K, ±5%, 1/4W | 1066-5125 | Allen-Bradley | CB5125 |
| R7 | Comp, 5.1K, ±5%, 1/4W | 1066-5125 | Allen-Bradley | CB5125 |
| R8 | Comp, 5.1K, ±5%, 1/4W | 1066-5125 | Allen-Bradley | CB5125 |
| R9 | Comp, 680Ω, ±5%, 1/4W | 1066-6815 | Allen-Bradley | CB6815 |
| R10 | Comp, 680Ω, ±5%, 1/4W | 1066-6815 | Allen-Bradley | CB6815 |
| R11 | Comp, 750Ω, ±5%, 1/4W | 1066-7515 | Allen-Bradley | CB7515 |
| R12 | Comp, 750Ω, ±5%, 1/4W | 1066-7515 | Allen-Bradley | CB7515 |
| R13 | Comp, 680Ω, ±5%, 1/4W | 1066-6815 | Allen-Bradley | CB6815 |
| R14 | Comp, 750Ω, ±5%, 1/4W | 1066-7515 | Allen-Bradley | CB7515 |
| R15 | Comp, 1.5K, ±5%, 1/4W | 1066-1525 | Allen-Bradley | CB1525 |
| R16 | Comp, 1.5K, ±5%, 1/4W | 1066-1525 | Allen-Bradley | CB1525 |
| R17 | Comp, 1.5K, ±5%, 1/4W | 1066-1525 | Allen-Bradley | CB1525 |
| R18 | Comp, 1.5K, ±5%, 1/4W | 1066-1525 | Allen-Bradley | CB1525 |
| R19 | Comp, 1.5K, ±5%, 1/4W | 1066-1525 | Allen-Bradley | CB1525 |
| R20 | Comp, 100Ω, ±5%, 1/4W | 1066-1015 | Allen-Bradley | CB1015 |
| R21 | Comp, 1K, ±5%, 1/4W | 1066-1025 | Allen-Bradley | CB1025 |
| R22 | Comp, 2.2K, ±5%, 1/4W | 1066-2225 | Allen-Bradley | CB2225 |
| R23 | Comp, 2.2K, ±5%, 1/4W | 1066-2225 | Allen-Bradley | CB2225 |
| R24 | Comp, 1K, ±5%, 1/4W | 1066-1025 | Allen-Bradley | CB1025 |
| R25 | Comp, 1.5K, ±5%, 1/4W | 1066-1525 | Allen-Bradley | CB1525 |
| R26 | Comp, 1.5K, ±5%, 1/4W | 1066-1525 | Allen-Bradley | CB1525 |
| R27 | Comp, 1.5K, ±5%, 1/4W | 1066-1525 | Allen-Bradley | CB1525 |
| R28 | Comp, 1.5K, ±5%, 1/4W | 1066-1525 | Allen-Bradley | CB1525 |
| R29 | Comp, 5.1K, ±5%, 1/4W | 1066-5125 | Allen-Bradley | CB5125 |
| R30 | Comp, 10K, ±5%, 1/4W | 1066-1035 | Allen-Bradley | CB1035 |
| R31 | Comp, 1.5K, ±5%, 1/4W | 1066-1525 | Allen-Bradley | CB1525 |
| R32 | Comp, 1.5K, ±5%, 1/4W | 1066-1525 | Allen-Bradley | CB1525 |
| R33 | Comp, 1.5K, ±5%, 1/4W | 1066-1525 | Allen-Bradley | CB1525 |
| R34 | Comp, 1.5K, ±5%, 1/4W | 1066-1525 | Allen-Bradley | CB1525 |
| R35 | Comp, 510Ω, ±5%, 1/4W | 1066-5115 | Allen-Bradley | CB5115 |
| R36 | Comp, 750Ω, ±5%, 1/4W | 1066-7515 | Allen-Bradley | CB7515 |
| R37 | Comp, 1.5K, ±5%, 1/4W | 1066-1525 | Allen-Bradley | CB1525 |
| R38 | Comp, 510Ω, ±5%, 1/4W | 1066-5115 | Allen-Bradley | CB5115 |
| R39 | Comp, 1.5K, ±5%, 1/4W | 1066-1525 | Allen-Bradley | CB1525 |
| R40 | Comp, 1.5K, ±5%, 1/4W | 1066-1525 | Allen-Bradley | CB1525 |
| R41 | Comp, 1.5K, ±5%, 1/4W | 1066-1525 | Allen-Bradley | CB1525 |
| R42 | Comp, 1.5K, ±5%, 1/4W | 1066-1525 | Allen-Bradley | CB1525 |
| R43 | Comp, 750Ω, ±5%, 1/4W | 1066-7515 | Allen-Bradley | CB7515 |
| R44 | Comp, 270Ω, ±5%, 1/4W | 1066-2715 | Allen-Bradley | CB2715 |
| | INTEGRATED CIRCUITS | | | |
| U1 | IC, Quad, 2-Input Pos NOR Gates | 2025-0108 | T.I. | SN74LS02N |
| U2 | IC, SN74L03N | 2025-0080 | T.I. | SN74L03N |
| U3 | IC, Quad, 2-Input NOR Gate | 2025-0037 | T.I. | SN74L02N |
| U4 | IC, Quad, 2-Input NAND Gate | 2025-0036 | T.I. | SN74L00N |
| U5 | IC, Hex Inverter SN74L04N | 2025-0038 | T.I. | SN74L04N |
| U6 | IC, SN74L03N | 2025-0080 | T.I. | SN74L03N |
| U7 | IC, Quad, 2-Input NAND Gate | 2025-0036 | T.I. | SN74L00N |

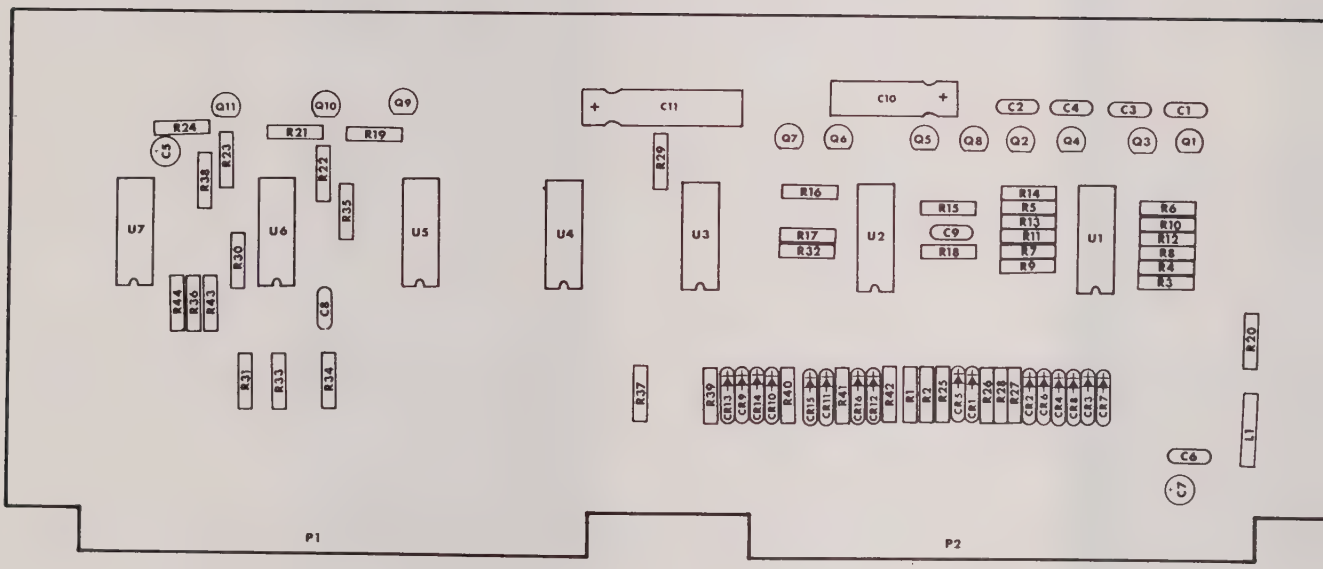
Q11
Q10
Q9
R24
R21
R19
C5
R23
R38
R22
R35
U7
U6
U5
R30
R44
R36
R43
C8
R31
R33
R34
C11
R29
U4
U3
Q7
Q6
Q5
Q8
Q2
Q4
Q3
Q1
C10
C2
C4
C3
C1
R16
R17
R32
U2
R15
C9
R18
R14
R5
R13
R11
R7
R9
U1
R6
R10
R12
R8
R4
R3
R20
L1
C6
C7
R37
R39
CR13
CR9
CR14
CR10
R40
CR15
CR11
R41
CR16
CR12
R42
R1
R2
R25
CR5
CR1
R26
R28
R27
CR2
CR6
CR4
CR8
CR3
CR7
P1
P2

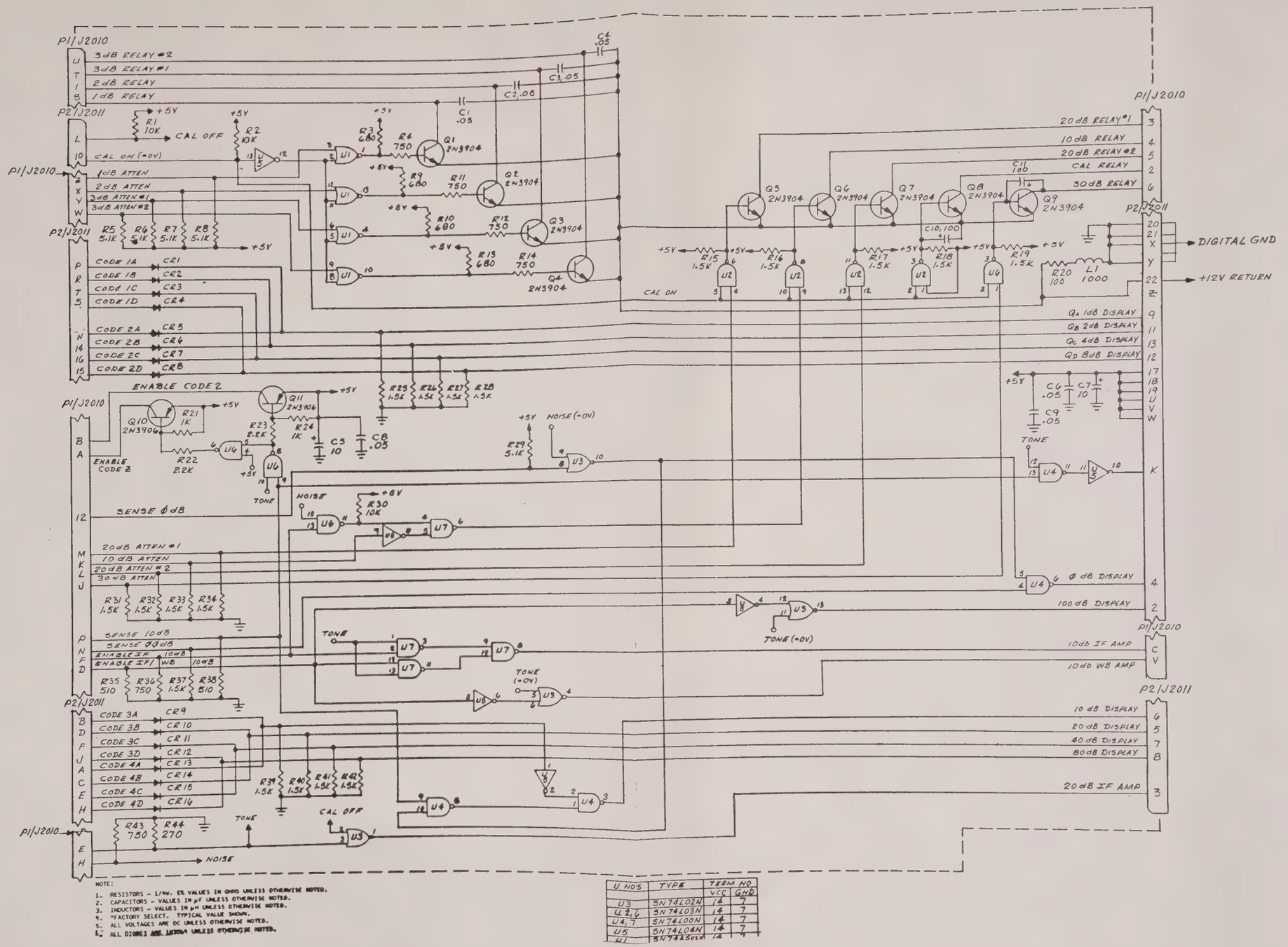


NOTE:
1. RESISTORS - 1/4W, 5% VALUES IN OHMS UNLESS OTHERWISE NOTED.
2. CAPACITORS - VALUES IN μF UNLESS OTHERWISE NOTED.
3. INDUCTORS - VALUES IN μH UNLESS OTHERWISE NOTED.
4. *FACTORY SELECT. TYPICAL VALUE SHOWN.
5. ALL VOLTAGES ARE DC UNLESS OTHERWISE NOTED.
6. ALL DIODES ARE 1N4004 UNLESS OTHERWISE NOTED.

| U NOS | TYPE | TERM NO | |
|---|---|---|---|
| | | VCC | GND |
| U3 | SN74L02N | 14 | 7 |
| U2,6 | SN74L03N | 14 | 7 |
| U4,7 | SN74L00N | 14 | 7 |
| U5 | SN74L04N | 14 | 7 |
| U1 | SN74LS01N | 14 | 7 |

5601**0063**3

Figure 14. Attenuator & Gain Select, 2400.

DECADE ATTENUATOR, 2500

| CKT. REF. | DESCRIPTION | CE STOCK NO. | MFR. | MFR. NO. |
|---|---|---|---|---|
| 2500 | Decades Attenuator PCB Assy | 7001-0282 | Cushman | |
| | Decades Attenuator Housing | 7040-0038 | Cushman | |
| | CAPACITORS | | | |
| C1 | Feed Thru 1000pF, ±20%, 500V | 1005-0008 | Erie | 357-0010X5U0-102M |
| C2 | Feed Thru 1000pF, +100-0%, 500V | 1005-0101 | Erie | 2404-000-X5U0-102P |
| C3 | Feed Thru 1000pF, ±20%, 500V | 1005-0008 | Erie | 357-0010X5U0-102M |
| C4 | Feed Thru 1000pF, +100-0%, 500V | 1005-0101 | Erie | 2404-000-X5U0-102P |
| C5 | Feed Thru 1000pF, ±20%, 500V | 1005-0008 | Erie | 357-0010X5U0-102M |
| C6 | Feed Thru 1000pF, +100-0%, 500V | 1005-0101 | Erie | 2404-000-X5U0-102P |
| C7 | Feed Thru 1000pF, ±20%, 500V | 1005-0008 | Erie | 357-0010X5U0-102M |
| C8 | Feed Thru 1000pF, +100-0%, 500V | 1005-0101 | Erie | 2404-000-X5U0-102P |
| C9 | Feed Thru 1000pF, ±20%, 500V | 1005-0008 | Erie | 357-0010X5U0-102M |
| C10 | Feed Thru 1000pF, +100-0%, 500V | 1005-0101 | Erie | 2404-000-X5U0-102P |
| C11 | Feed Thru 1000pF, ±20%, 500V | 1005-0008 | Erie | 357-0010X5U0-102M |
| C12 | Feed Thru 1000pF, +100-0%, 500V | 1005-0101 | Erie | 2404-000-X5U0-102P |
| C13 | Feed Thru 1000pF, ±20%, 500V | 1005-0008 | Erie | 357-0010X5U0-102M |
| C14 | Feed Thru 1000pF, +100-0%, 500V | 1005-0101 | Erie | 2404-000-X5U0-102P |
| C15 | Feed Thru 1000pF, ±20%, 500V | 1005-0008 | Erie | 357-0010X5U0-102M |
| C16 | Feed Thru 1000pF, +100-0%, 500V | 1005-0101 | Erie | 2404-000-X5U0-102P |
| C17 | Feed Thru 1000pF, ±20%, 500V | 1005-0008 | Erie | 357-0010X5U0-102M |
| C18 | Feed Thru 1000pF, +100-0%, 500V | 1005-0101 | Erie | 2404-000-X5U0-102P |
| C19 | Feed Thru 1000pF, ±20%, 500V | 1005-0008 | Erie | 357-0010X5U0-102M |
| C20 | Feed Thru 1000pF, +100-0%, 500V | 1005-0101 | Erie | 2404-000-X5U0-102P |
| | DIODES | | | |
| CR1 | Si, Signal, 75V PIV | 1281-0013 | Teledyne | 1N3064 |
| CR2 | Si, Signal, 75V PIV | 1281-0013 | Teledyne | 1N3064 |
| CR3 | Si, Signal, 75V PIV | 1281-0013 | Teledyne | 1N3064 |
| CR4 | Si, Signal, 75V PIV | 1281-0013 | Teledyne | 1N3064 |
| CR5 | Si, Signal, 75V PIV | 1281-0013 | Teledyne | 1N3064 |
| | CONNECTORS | | | |
| J1 | Mintr, 75 Ohm Str, JK, Bhd, Mtscr-on | 2536-0065 | Cablewave | 700611NP |
| J2 | Mintr, 75 Ohm Str, JK, Bhd, Mtscr-on | 2536-0065 | Cablewave | 700611NP |
| J3 | Mintr, 75 Ohm Str, JK, Bhd, Mtscr-on | 2536-0065 | Cablewave | 700611NP |
| | RELAY | | | |
| K1 | Rly, Case Dpdt, 12V | 1313-0021 | Cushman | |
| K2 | Rly, Case Dpdt, 12V | 1313-0021 | Cushman | |
| K3 | Rly, Case Dpdt, 12V | 1313-0021 | Cushman | |
| K4 | Rly, Case Dpdt, 12V | 1313-0021 | Cushman | |
| K5 | Rly, Case Dpdt, 12V | 1313-0021 | Cushman | |
| | INDUCTORS | | | |
| L1 | RF, Choke, 68μH, ±10% | 1585-0069 | Delevan | 1025-64 |
| L2 | RF, Choke, 68μH, ±10% | 1585-0069 | Delevan | 1025-64 |
| L3 | RF, Choke, 68μH, ±10% | 1585-0069 | Delevan | 1025-64 |
| L4 | RF, Choke, 68μH, ±10% | 1585-0069 | Delevan | 1025-64 |
| L5 | RF, Choke, 68μH, ±10% | 1585-0069 | Delevan | 1025-64 |
| L6 | RF, Choke, 68μH, ±10% | 1585-0069 | Delevan | 1025-64 |
| L7 | RF, Choke, 68μH, ±10% | 1585-0069 | Delevan | 1025-64 |
| L8 | RF, Choke, 68μH, ±10% | 1585-0069 | Delevan | 1025-64 |
| L9 | RF, Choke, 68μH, ±10% | 1585-0069 | Delevan | 1025-64 |
| L10 | RF, Choke, 68μH, ±10% | 1585-0069 | Delevan | 1025-64 |

DECADE ATTENUATOR, 2500 (cont)

| CKT. REF. | DESCRIPTION | CE STOCK NO. | MFR. | MFR. NO. |
|---|---|---|---|---|
| | RESISTORS | | | |
| R1 | MF, 91.67Ω, ±.1% 1/10W, 25PPM | 1074-0037 | Electra | MF4C-E |
| R2 | MF, 371.3 Ω, ±.1%, 1/10W, 25PPM | 1074-0040 | Electra | MF4C-E |
| R3 | MF, 91.67Ω, ±.1%, 1/10W, 25PPM | 1074-0037 | Electra | MF4C-E |
| R4 | MF, 144.4Ω, ±.1%, 1/10W, 25PPM | 1074-0039 | Electra | MF4C-E |
| R5 | MF, 106.7Ω, ±.1%, 1/10W, 25PPM | 1074-0038 | Electra | MF4C-E |
| R6 | MF, 144.4Ω, ±.1%, 1/10W, 25PPM | 1074-0039 | Electra | MF4C-E |
| R7 | MF, 91.67Ω, ±.1%, 1/10W, 25PPM | 1074-0037 | Electra | MF4C-E |
| R8 | MF, 371.3Ω, ±.1%, 1/10W, 25PPM | 1074-0040 | Electra | MF4C-E |
| R9 | MF, 91.67Ω, ±.1%, 1/10W, 25PPM | 1074-0037 | Electra | MF4C-E |
| R10 | Comp, 75Ω, ±5%, 1/4W | 1066-7505 | Allen-Bradley | CB7505 |
| R11 | MF, 79.89Ω, ±.1%, 1/10W, 25PPM | 1074-1050 | Dale | MF 1/10 |
| R12 | MF, 1.185K, ±.1%, 1/10W, 25PPM | 1074-1052 | Dale | MF 1/10 |
| R13 | MF, 79.89Ω, ±.1%, 1/10W, 25PPM | 1074-1050 | Dale | MF 1/10 |

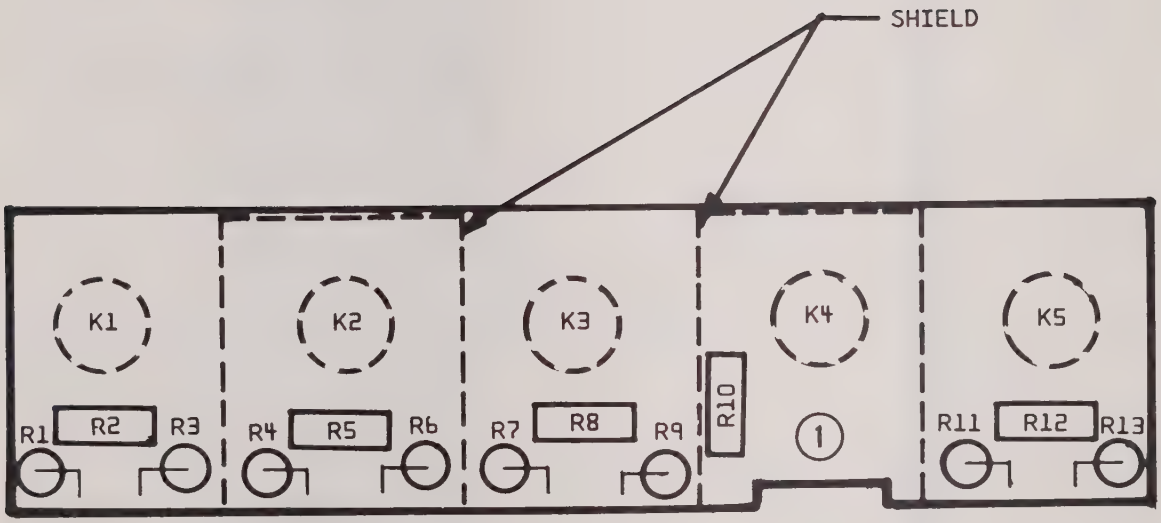
SHIELD
K1
K2
K3
K4
K5
R1
R2
R3
R4
R5
R6
R7
R8
R9
R10
R11
R12
R13
1

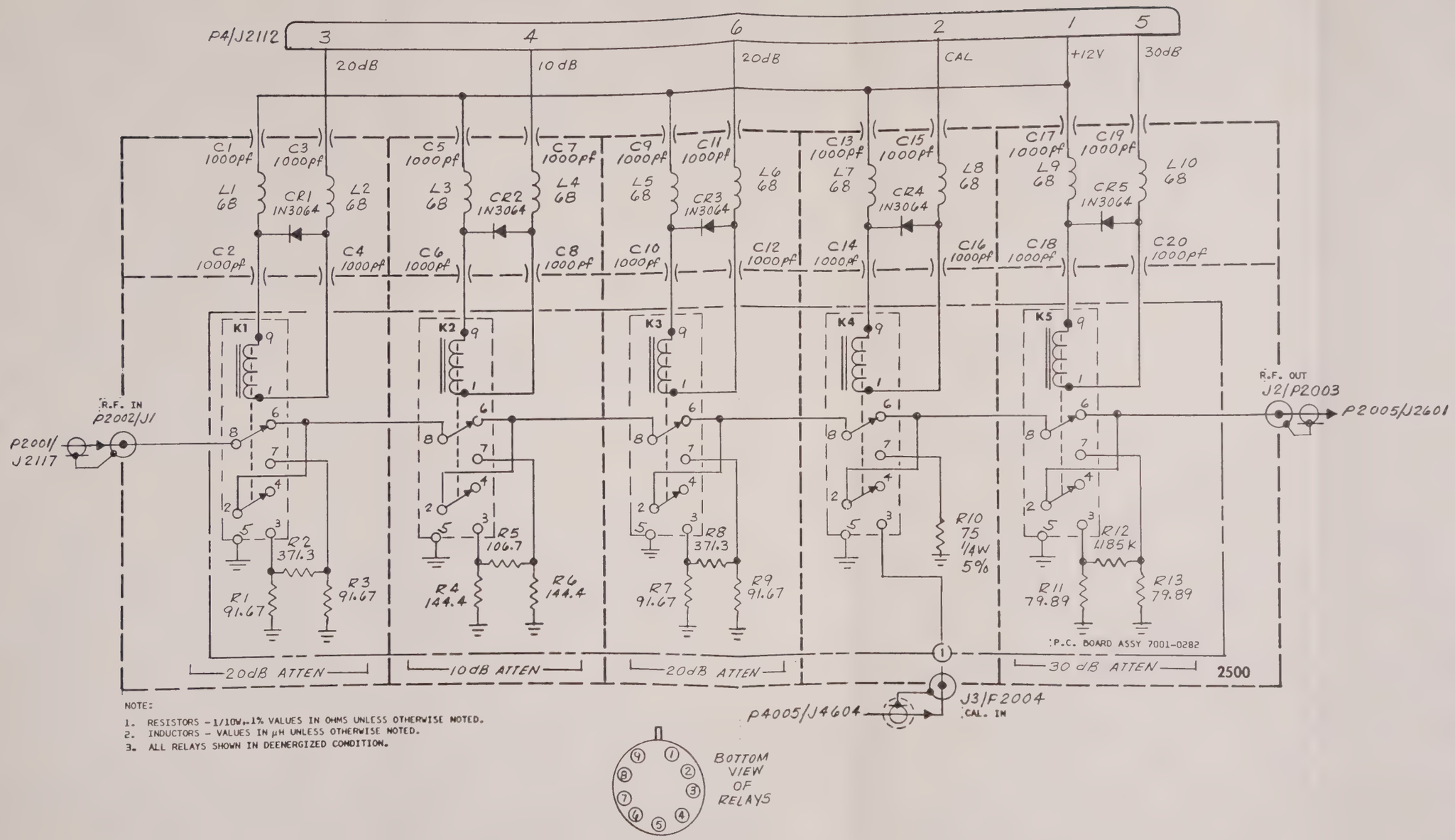


NOTE:

1. RESISTORS – 1/10W, ±1% VALUES IN OHMS UNLESS OTHERWISE NOTED.
2. INDUCTORS – VALUES IN μH UNLESS OTHERWISE NOTED.
3. ALL RELAYS SHOWN IN DEENERGIZED CONDITION.



Figure 15. Decade Attenuator, 2500.

UNITS ATTENUATOR, 2600

| CKT. REF. | DESCRIPTION | CE STOCK NO. | MFR. | MFR. NO. |
|---|---|---|---|---|
| 2600 | Units Attenuator PCB Assy | 7001-0283 | | |
| | P.C. Board | 1780-0561 | | |
| | Units Attenuators Housing | 7040-0039 | | |
| | CAPACITORS | | | |
| C1 | Feed Thru, 1000pF, ±20%, 500V | 1005-0008 | Erie | 357-001-X5U0 |
| C2 | Feed Thru, 1000pF, +100-0%, 500V | 1005-0101 | Erie | 2404-000-X5U0 |
| C3 | Feed Thru, 1000pF, ±20%, 500V | 1005-0008 | Erie | 357-001-X5U0 |
| C4 | Feed Thru, 1000pF, +100-0%, 500V | 1005-0101 | Erie | 2404-000-X5U0 |
| C5 | Feed Thru, 1000pF, ±20%, 500V | 1005-0008 | Erie | 357-001-X5U0 |
| C6 | Feed Thru, 1000pF, +100-0%, 500V | 1005-0101 | Erie | 2404-000-X5U0 |
| C7 | Feed Thru, 1000pF, ±20%, 500V | 1005-0008 | Erie | 357-001-X5U0 |
| C8 | Feed Thru, 1000pF, +100-0%, 500V | 1005-0101 | Erie | 2404-000-X5U0 |
| C9 | Feed Thru, 1000pF, ±20%, 500V | 1005-0008 | Erie | 357-001-X5U0 |
| C10 | Feed Thru, 1000pF, +100-0%, 500V | 1005-0101 | Erie | 2404-000-X5U0 |
| C11 | Feed Thru, 1000pF, ±20%, 500V | 1005-0008 | Erie | 357-001-X5U0 |
| C12 | Feed Thru, 1000pF, +100-0%, 500V | 1005-0101 | Erie | 2404-000-X5U0 |
| C13 | Feed Thru, 1000pF, ±20%, 500V | 1005-0008 | Erie | 357-001-X5U0 |
| C14 | Feed Thru, 1000pF, +100-0%, 500V | 1005-0101 | Erie | 2404-000-X5U0 |
| C15 | Feed Thru, 1000pF, ±20%, 500V | 1005-0008 | Erie | 357-001-X5U0 |
| C16 | Feed Thru, 1000pF, +100-0%, 500V | 1005-0101 | Erie | 2404-000-X5U0 |
| C17 | Mica, 36pF, ±5%, 500V | 1002-0041 | Elmenco | DM15-E-360J |
| | DIODES | | | |
| CR1 | Si, Signal, 1N3064, 75V PIV | 1281-0013 | Teledyne | 1N3064 |
| CR2 | Si, Signal, 1N3064, 75V PIV | 1281-0013 | Teledyne | 1N3064 |
| CR3 | Si, Signal, 1N3064, 75V PIV | 1281-0013 | Teledyne | 1N3064 |
| CR4 | Si, Signal, 1N3064, 75V PIV | 1281-0013 | Teledyne | 1N3064 |
| | CONNECTORS | | | |
| J1 | Mintr, 75 Ohm, Str, JK, Bhd, MF, Scr-on | 2536-0065 | Cablewave | 700611NP |
| J2 | Mintr, 75 Ohm, Str, JK, Bhd, MF, Scr-on | 2536-0065 | Cablewave | 700611NP |
| | RELAY | | | |
| K1 | Rly, Dpdt, 12V | 1313-0021 | Teledyne | 712Y-12 |
| K2 | Rly, Dpdt, 12V | 1313-0021 | Teledyne | 712Y-12 |
| K3 | Rly, Dpdt, 12V | 1313-0021 | Teledyne | 712Y-12 |
| K4 | Rly, Dpdt, 12V | 1313-0021 | Teledyne | 712Y-12 |
| | INDUCTORS | | | |
| L1 | RF, Choke, 68μH, ±10% | 1585-0069 | Delevan | 1025-64 |
| L2 | RF, Choke, 68μH, ±10% | 1585-0069 | Delevan | 1025-64 |
| L3 | RF, Choke, 68μH, ±10% | 1585-0069 | Delevan | 1025-64 |
| L4 | RF, Choke, 68μH, ±10% | 1585-0069 | Delevan | 1025-64 |
| L5 | RF, Choke, 68μH, ±10% | 1585-0069 | Delevan | 1025-64 |
| L6 | RF, Choke, 68μH, ±10% | 1585-0069 | Delevan | 1025-64 |
| L7 | RF, Choke, 68μH, ±10% | 1585-0069 | Delevan | 1025-64 |
| L8 | RF, Choke, 68μH, ±10% | 1585-0069 | Delevan | 1025-64 |

UNITS ATTENUATOR, 2600

| CKT. REF. | DESCRIPTION | CE STOCK NO. | MFR. | MFR. NO. |
|---|---|---|---|---|
| | RESISTORS | | | |
| R1 | MF, 1.305K, ±25%, 1/10W, 25PPM | 1074-0028 | Electra | MF4C-E |
| R2 | MF, 8.653Ω, ±.25%, 1/10W, 100PPM | 1074-0001 | Electra | MF4C-E |
| R3 | MF, 1.305K, ±.25%, 1/10W, 25PPM | 1074-0028 | Electra | MF4C-E |
| R4 | MF, 654.4, ±.25%, 1/10W, 25PPM | 1074-0024 | Electra | MF4C-E |
| R5 | MF, 17.42Ω, ±.25%, 1/10W, 100PPM | 1074-0002 | Electra | MF4C-E |
| R6 | MF, 654.4, ±.25%, 1/10W, 25PPM | 1074-0024 | Electra | MF4C-E |
| R7 | MF, 438.6Ω, ±.1%, 1/10W, 25PPM | 1074-1051 | Dale | MF 1/10 |
| R8 | MF, 26.42Ω, ±.1%, 1/10W, 25PPM | 1074-1049 | Dale | LMF 1/10 |
| R9 | MF, 438.6Ω, ±.1%, 1/10W, 25PPM | 1074-1051 | Dale | MF 1/10 |
| R10 | MF, 438.6Ω, ±.1%, 1/10W, 25PPM | 1074-1051 | Dale | MF 1/10 |
| R11 | MF, 26.42Ω, ±.1%, 1/10W, 25PPM | 1074-1049 | Dale | LMF 1/10 |
| R12 | MF, 438.6Ω, ±.1%, 1/10W, 25PPM | 1074-1051 | Dale | MF 1/10 |

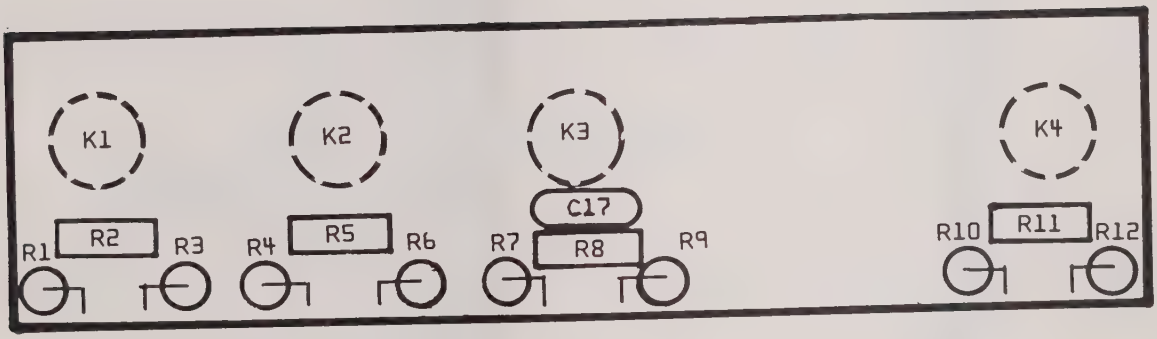
K1
K2
K3
K4
C17
R1
R2
R3
R4
R5
R6
R7
R8
R9
R10
R11
R12

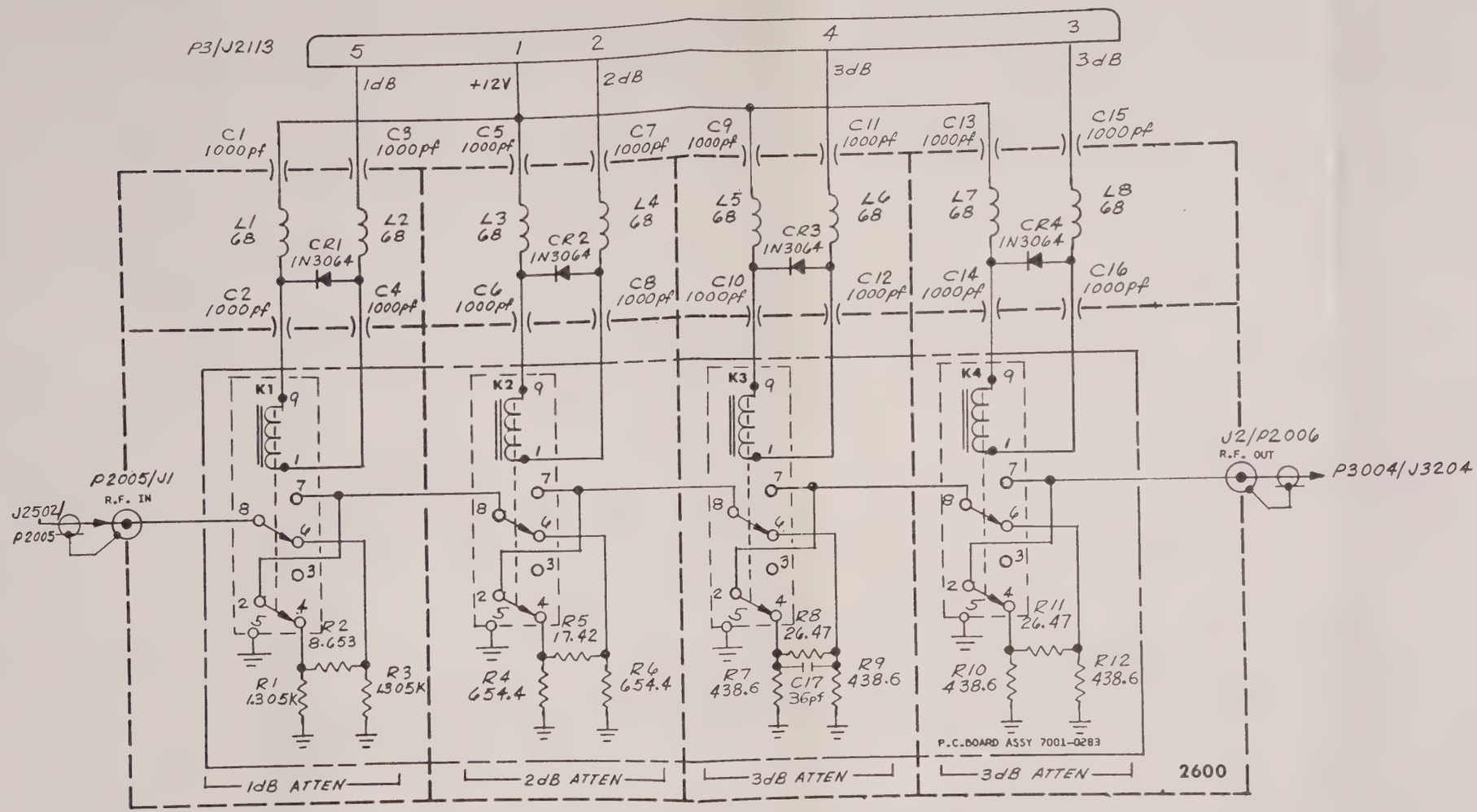


NOTE:

1. RESISTORS - 1/10W..1%VALUES IN OHMS UNLESS OTHERWISE NOTED.
2. INDUCTORS - VALUES IN μH UNLESS OTHERWISE NOTED.
3. ALL RELAYS SHOWN IN DE-ENERGIZED CONDITION.

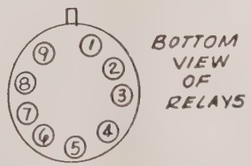


5601-0063-3

Figure 16. Units Attenuator, 2600.

MAIN CHASSIS, 3000/3100/4000/4100

| CKT. REF. | DESCRIPTION | CE STOCK NO. | MFR. | MFR. NO. |
|---|---|---|---|---|
| 3100/4100 | Main Chassis, PCB Assy | 7001-0280 | Cushman | |
| | P.C. Board | 1780-0557 | Cushman | |
| | CAPACITORS | | | |
| C1 | Cer, 2200, pF, ±2%, 3KV | 1005-0098 | Erie | 818 Y5 |
| C2 | Cer, 2200, pF, ±2%, 3KV | 1005-0098 | Erie | 818 Y5 |
| C3 | Cer, .01μF, +80-20%, 25V | 1005-0013 | Erie | 5835-512-Y5U-103Z |
| C4 | Cer, .05μF, +80 -20%, 25V | 1005-0014 | Erie | 5855-514-Y5U-503Z |
| | CONNECTORS | | | |
| J3101 | 44 contact, sgl, row, dip, term, PCB, JK | 2535-0078 | Amphenol | 225-22251-104 |
| J3102 | 44 contact, sgl, row, dip, term PCB, JK | 2535-0078 | Amphenol | 225-22251-104 |
| J3103 | 44 contact, sgl, row, dip, term PCB, JK | 2535-0078 | Amphenol | 225-22251-104 |
| J3104 | 44 contact, sgl, row, dip, term PCB, JK | 2535-0078 | Amphenol | 225-22251-104 |
| J3105 | 44 contact, sgl, row, dip, term PCB, JK | 2535-0078 | Amphenol | 225-22251-104 |
| J3106 | 44 contact, sgl, row, dip, term PCB, JK | 2535-0078 | Amphenol | 225-22251-104 |
| J3107 | 44 contact, sgl, row, dip, term PCB, JK | 2535-0078 | Amphenol | 225-22251-104 |
| J3108 | 44 contact, sgl, row, dip, term PCB, JK | 2535-0078 | Amphenol | 225-22251-104 |
| J3109 | 44 contact, sgl, row, dip, term PCB, JK | 2535-0078 | Amphenol | 225-22251-104 |
| J3110 | 44 contact, sgl, row, dip, term PCB, JK | 2535-0078 | Amphenol | 225-22251-104 |
| J4101 | 44 contact, sgl, row, dip, term PCB, JK | 2535-0078 | Amphenol | 225-22251-104 |
| J4102 | 44 contact, sgl, row, dip, term PCB, JK | 2535-0078 | Amphenol | 225-22251-104 |
| J4103 | 44 contact, sgl, row, dip, term PCB, JK | 2535-0078 | Amphenol | 225-22251-104 |
| J4104 | 44 contact, sgl, row, dip, term PCB, JK | 2535-0078 | Amphenol | 225-22251-104 |
| J4105 | 44 contact, sgl, row, dip, term PCB, JK | 2535-0078 | Amphenol | 225-22251-104 |
| J4106 | 44 contact, sgl, row, dip, term PCB, JK | 2535-0078 | Amphenol | 225-22251-104 |
| J4107 | 44 contact, sgl, row, dip, term PCB, JK | 2535-0078 | Amphenol | 225-22251-104 |
| J4108 | 44 contact, sgl, row, dip, term PCB, JK | 2535-0078 | Amphenol | 225-22251-104 |
| J4109 | 44 contact, sgl, row, dip, term PCB, JK | 2535-0078 | Amphenol | 225-22251-104 |
| J4110 | 44 contact, sgl, row, dip, term PCB, JK | 2535-0078 | Amphenol | 225-22251-104 |
| J4111 | 44 contact, dbl, row, dip, term PCB, JK | 2535-0076 | Amphenol | 225-22221-103 |
| | INDUCTORS | | | |
| L1 | Choke, 100MH, ±20% | 1585-0040 | Miller | B-6021 |
| L2 | Choke, 100MH, ±20% | 1585-0040 | Miller | B-6021 |

C1
C2
C3
C4
L1
L2
J4111
J3101
J3102
J3103
J3104
J3105
J3107
J3109
J3110
J4101
J4102
J4103
J4104
J4105
J4106
J4107
J4108
J4109
P1
P2

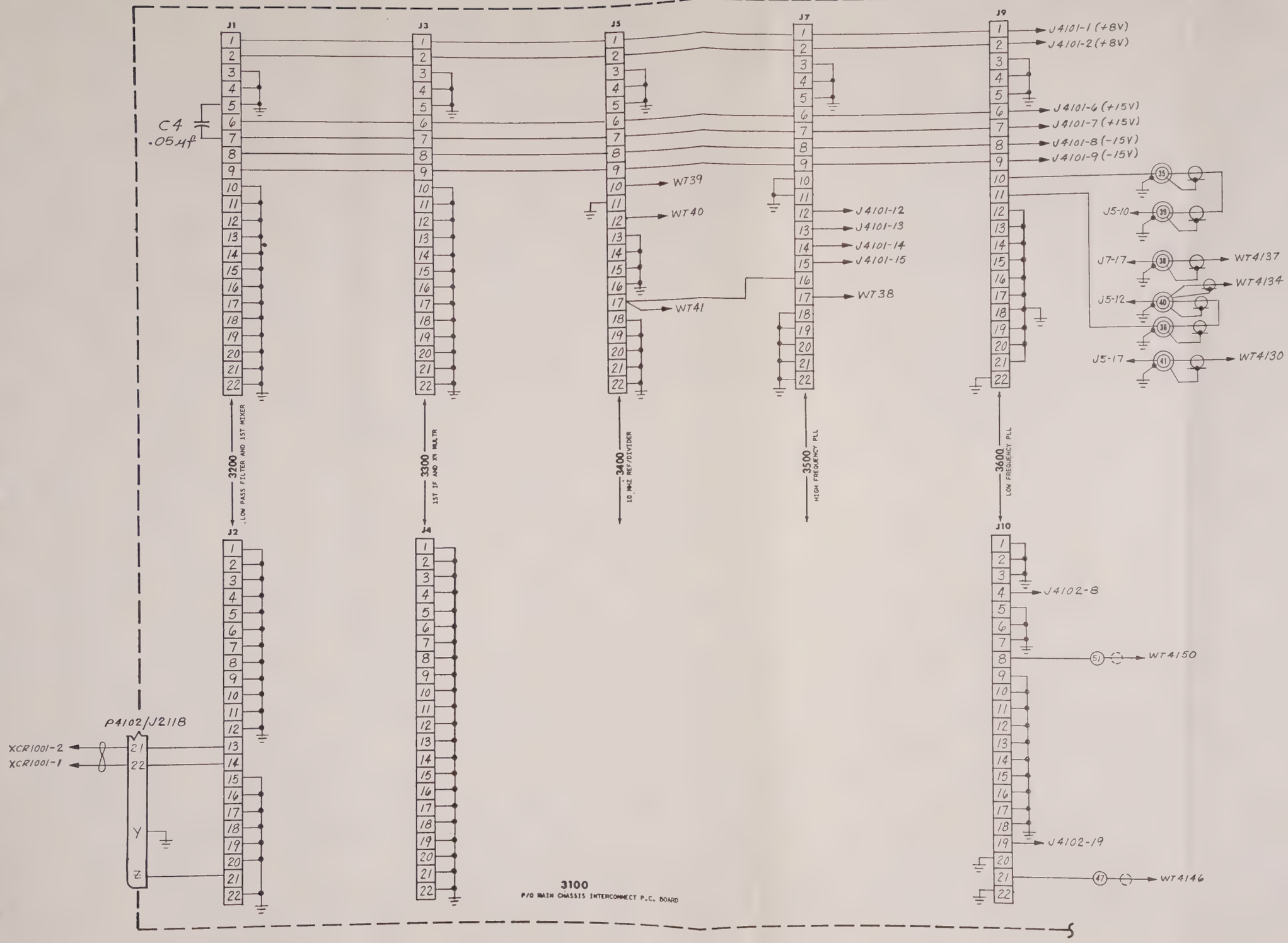


5601-0063-3

Figure 17. Main Chassis Interconnection Diagram, 3000/3100, sheet 1.

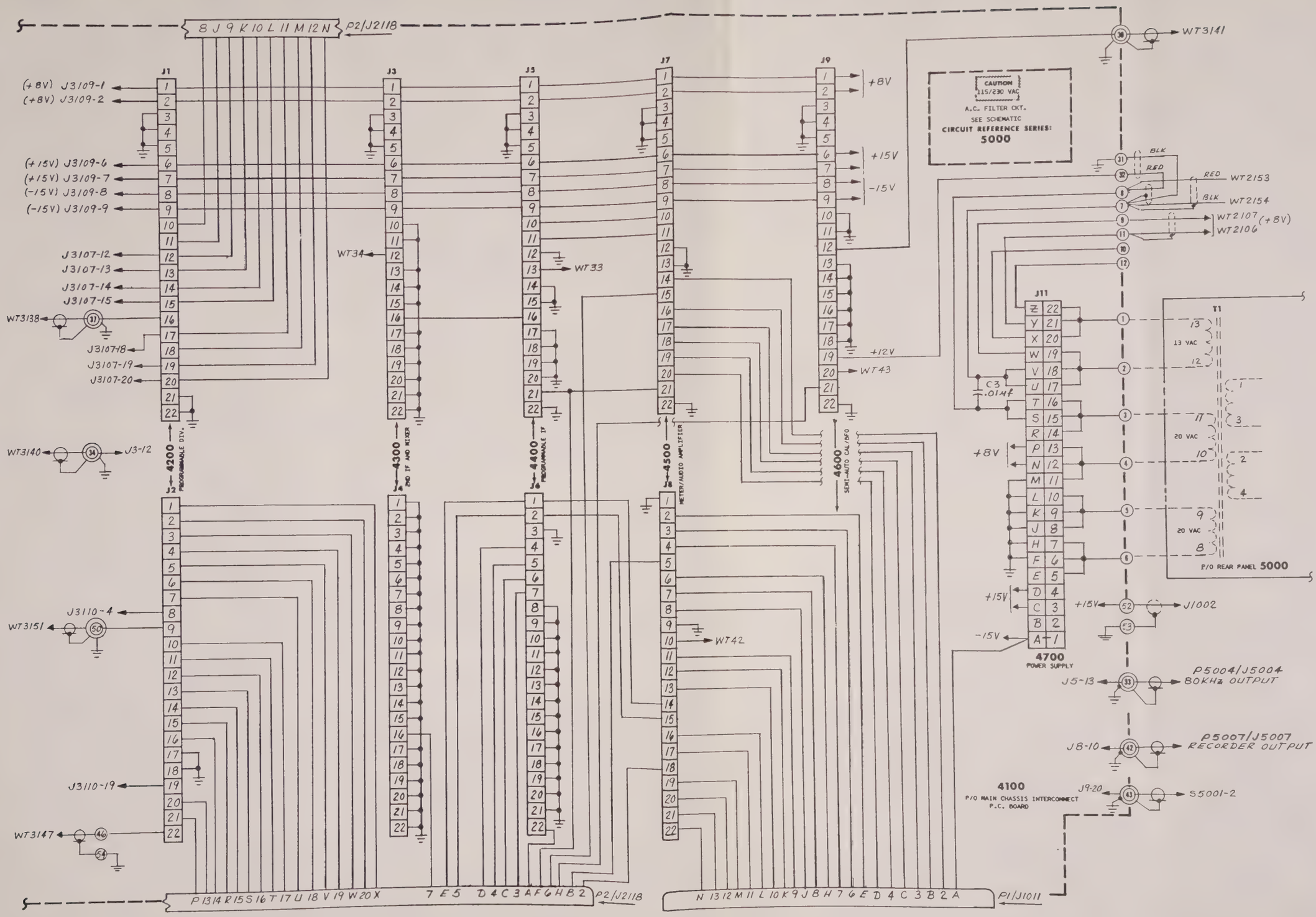


5601-0063-3

Figure 18. Main Chassis Interconnection Diagram, 4000/4100, sheet 2.

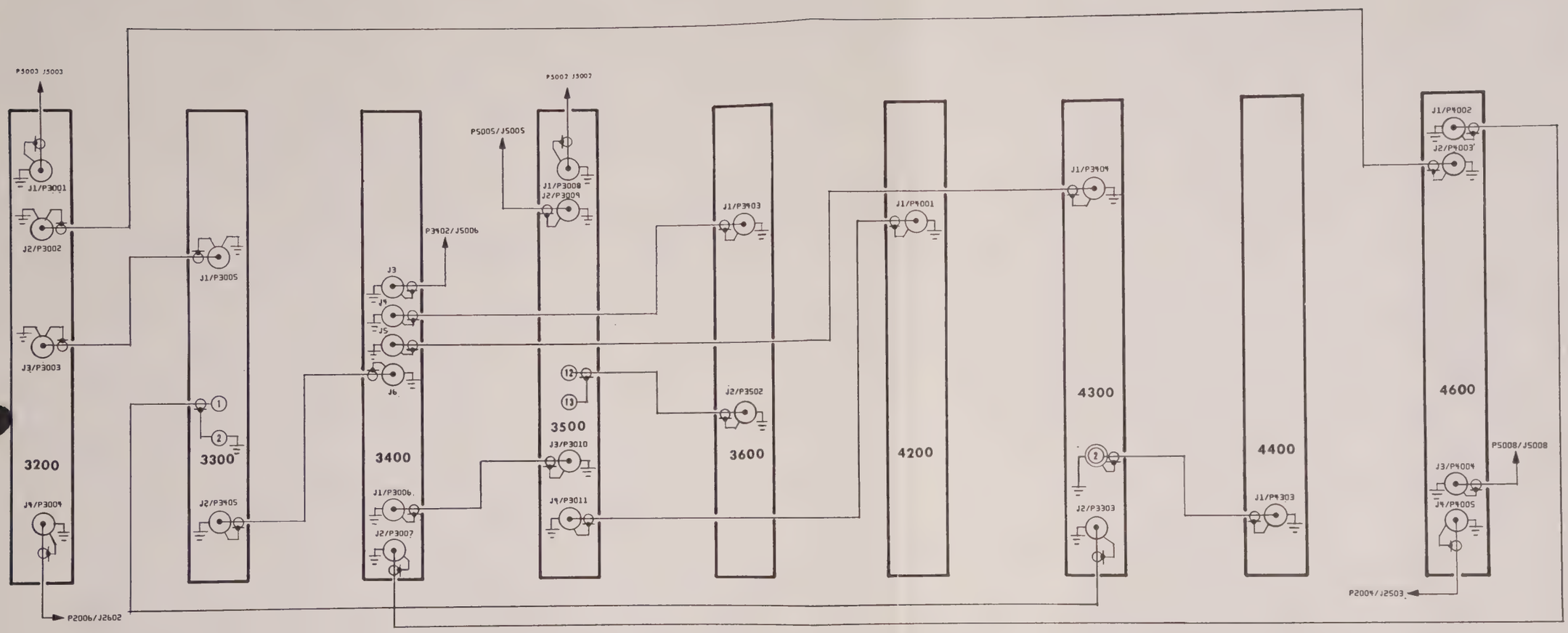


5601-0063-3

Figure 19. Main Chassis Interconnection Diagram, 3000/4000, sheet 3.

## LOW PASS FILTER & FIRST MIXER, 3200

| CKT. REF. | DESCRIPTION | CE STOCK NO. | MFR. | MFR. NO. |
|---|---|---|---|---|
| 3200 | LPF & lst Mixer, PCB Assy | 7001-0288 | Cushman | |
| | P.C. Board | 1780-0550 | Cushman | |
| | CAPACITORS | | | |
| C1 | Cer, .05μF, +80-20%, 25V | 1005-0014 | Erie | 5855-505-Y5U0-503Z |
| C2 | Tant, 10μF, +50-20%, 35V | 1011-0006 | ITT | TAG-10/35-20 |
| C3 | Cer, .05μF, +80-20%, 25V | 1055-0014 | Erie | 5855-505-Y5U0-503Z |
| C4 | Tant, 10μF, +50-20%, 35V | 1011-0006 | ITT | TAG-10/35-20 |
| C5 | Mica, 51pF, ±5%, 500V | 1002-0045 | Elmenco | DM15-E-510J |
| C6 | Mica, 680pF, ±5%, 300V | 1002-0022 | Elmenco | DM15-F-681J |
| C7 | Mica, 33pF, ±5%, 500V | 1002-0024 | Elmenco | DM15-E-330J |
| C8 | Mica, 240pF, ±5%, 500V | 1002-0030 | Elmenco | DM15-F-241J |
| C9 | Mica, 56pF, ±5%, 500V | 1002-0019 | Elmenco | DM15-E-560J |
| C10 | Mica, 100pF, ±5%, 500V | 1002-0011 | Elmenco | DM15-F-101J |
| C11 | Cer, .002μF, ±20%, 500V | 1005-0003 | Erie | 831-596-Z5U-202M |
| C12 | Cer, .002μF, ±20%, 500V | 1005-0003 | Erie | 831-596-Z5U-202M |
| C13 | Cer, .002μF, ±20%, 500V | 1005-0003 | Erie | 831-596-Z5U-202M |
| C14 | Tant, 10μF, +50-20%, 35V | 1011-0006 | ITT | TAG-10/35-20 |
| C15 | Cer, .01μF, +80-20%, 25V | 1005-0013 | Erie | 5835-512-Y5U-103Z |
| C16 | Cer, .002μF, ±20%, 500V | 1005-0003 | Erie | 831-596-Z5U-202M |
| C17 | Cer, .002μF, ±20%, 500V | 1005-0003 | Erie | 831-596-Z5U-202M |
| C18 | Cer, .002μF, ±20%, 500V | 1005-0003 | Erie | 831-596-Z5U-202M |
| C19 | Cer, .002μF, ±20%, 500V | 1005-0003 | Erie | 831-596-Z5U-202M |
| C20 | Cer, 1000pF, ±10%, 100V | 1005-0081 | Erie | 8121-100-W5R-102K |
| C21 | Cer, .002μF, ±20%, 500V | 1005-0003 | Erie | 831-596-Z5U-202M |
| C22 | Mica, 43pF, ±5%, 500V | 1002-0046 | Elmenco | DM15-E-430J |
| C23 | Cer, 3pF,±.25pF, 500V | 1005-0115 | Erie | 301-000-C0J0-309C |
| C24 | Mica, 100pF, ±5%, 500V | 1002-0011 | Elmenco | DM15-F-101J |
| C25 | Mica, 15pF, ±5%, 500V | 1002-0001 | Elmenco | DM15-C-150J |
| C26 | Mica, 100pF, ±5%, 500V | 1002-0011 | Elmenco | DM15-F-101J |
| C27 | Mica, 20pF, ±5%, 500V | 1002-0060 | Elmenco | DM15-F-200J |
| C28 | Mica, 96pF, ±5%, 500V | 1002-0049 | Elmenco | DM15-F-960F |
| C29 | Mica, 10pF, ±5%, 500V | 1002-0016 | Elmenco | DM15-E-560J |
| C30 | Cer, 9 -35pF, 200V | 1001-0006 | Erie | CV31D350 |
| C31 | Cer, 9 -35pF, 200V | 1001-0006 | Erie | CV31D350 |
| C32 | Tant, 10μF, +50-20%, 35V | 1011-0006 | ITT | TAG-10/35-20 |
| C33 | Cer, .01μF, +80-20%, 25V | 1005-0013 | Erie | 5835-512-Y5U-1032 |
| C34 | Tant, 10μF, +50-20%, 35V | 1011-0006 | ITT | TAG-10/35-20 |
| C35 | Cer, .05μF, +80-20%, 25V | 1005-0014 | Erie | 5855-505-Y5U0-503Z |
| C36 | Cer, .01μF, +80-20%, 25V | 1005-0013 | Erie | 5835-512-Y5U-103Z |
| C37 | Tant, 10μF, +50-20%, 35V | 1011-0006 | ITT | TAG-10/35-20 |
| C38 | Tant, 10μF, +50-20%, 35V | 1011-0006 | ITT | TAG-10/35-20 |
| C39 | Cer, .01μF, +80-20%, 25V | 1005-0013 | Erie | 5835-512-Y5U-103Z |
| C40 | Tant, 10μF, +50-20%, 35V | 1011-0006 | ITT | TAG-10/35-20 |
| C41 | Cer, .05μF, +80-20%, 25V | 1005-0014 | Erie | 5855-505-Y5U0-503Z |
| C42 | Mica, FSV | 1002-xxxx | Elmenco | DM15 |
| C43 | Cer, .01μF, +80-20%, 25V | 1005-0013 | Erie | 5835-512-Y5U-103Z |
| C44 | Cer, .01μF, +80-20%, 25V | 1005-0013 | Erie | 5835-512-Y5U-103Z |
| C45 | Tant, 10μF, +50-20%, 35V | 1011-0006 | ITT | TAG-10/35-20 |
| C46 | Cer, 1000pF, ±10%, 100V | 1005-0081 | Erie | 8121-100-W5R, 102K |
| C47 | Cer, 1000pF, ±10%, 100V | 1005-0081 | Erie | 8121-100-W5R, 102K |
| C48 | Mica, FSV | 1002-xxxx | Elmenco | DM15 |
| C49 | Tant, 10μF, +50-20%, 35V | 1011-0006 | ITT | TAG-10/35-20 |
| C50 | Elct, 1μF, ±10%, 25V | 1013-0004 | Mallory | TT50X1 |

LOW PASS FILTER & FIRST MIXER, 3200 (cont.)

| CKT. REF. | DESCRIPTION | CE STOCK NO. | MFR. | MFR. NO. |
|---|---|---|---|---|
| C51 | Cer, 1000fP, ±10%, 100V | 1005-0081 | Erie | 8121-100-W5R, 102K |
| C52 | Cer, .002μf, 20%, 500V | 1005-0003 | Erie | 831-596-Z5U-202M |
| C53 | Tant, 10μF, +50-20%, 35V | 1011-0006 | ITT | TAG-10/35-20 |
| C54 | Cer, .01μF, +80-20%, 25V | 1005-0013 | Erie | 5835-512-Y5U-103Z |
| C55 | Mica, 33pF, ±5%, 500V | 1002-0024 | Elmenco | DM15-E-330J |
| C56 | Mylar, .22μF, ±10%, 100V | 1008-0091 | Electrocube | 232A1B224K |
| C57 | Tant, 10μF, +50-20%, 35V | 1011-0006 | ITT | TAG-10/35-20 |
| C58 | Mica, 5pF, ±.5pF, 500V | 1002-0028 | Elmenco | DM15-C-050D |
| C59 | Tant, 10μF, +50-20%, 35V | 1011-0006 | ITT | TAG-10/35-20 |
| C60 | Mica, 75pF, ±5%, 500V | 1002-0025 | Elmenco | DM15-750J |
| C61 | Mica, 18pF, ±5%, 500V | 1002-0014 | Elmenco | DM15-E-180J |
| C62 | Cer, .05μF, +80-20%, 25V | 1005-0014 | Erie | 5855-505-Y5U0-503Z |
| C63 | Mylar, .22μF, 10%, 100V | 1008-0091 | Electrocube | 232A1B224K |
| C64 | Mica, 24pF, ±5%, 500V | 1002-0051 | Elmenco | DM15-E-240J |
| C65 | Cer, .01μF, +80-20%, 25V | 1005-0013 | Erie | 5835-512-Y5U-103Z |
| C66 | Mylar, .22μF, ±10%, 100V | 1008-0091 | Electrocube | 232A1B224K |
| C67 | Cer, .05μF, +80 -20%, 25V | 1005-0014 | Erie | 5855-505-Y5U0-503Z |
| C68 | Cer, .05μF, +80-20%, 25V | 1005-0014 | Erie | 5855-505-Y5U0-503Z |
| C69 | Cer, .05μF, +80-20%, 25V | 1005-0014 | Erie | 5855-505-Y5U0-503Z |
| C70 | Tant, 10μF, +50-20%, 35V | 1011-0006 | ITT | TAG-10/35-20 |
| C71 | Cer, .01μF, +80-20%, 25V | 1005-0013 | Erie | 5835-512-Y5U-103Z |
| C72 | Tant, 10μF, +50-20%, 35V | 1011-0006 | ITT | TAG-10/35-20 |
| C73 | Cer, .01μF, +80-20%, 25V | 1005-0013 | Erie | 5835-512-Y5U-103Z |
| | DIODES | | | |
| CR1 | Si, Signal, 75 PIV, 1N3064 | 1281-0013 | Teledyne | 1N3064 |
| CR2 | HP2800 | 1283-0001 | HPA | 5082-2800 |
| CR3 | HP2800 | 1283-0001 | HPA | 5082-2800 |
| CR4 | HP2800 | 1283-0001 | HPA | 5082-2800 |
| CR5 | HP2800 | 1283-0001 | HPA | 5082-2800 |
| CR6 | Si, Signal, 75 PIV, 1N3064 | 1281-0013 | Teledyne | 1N3064 |
| | CONNECTORS | | | |
| J1 | Conn-SMB, 50 OHM Rtang JK PC MT | 2536-0060 | Cablewave | 700214NP |
| J2 | Conn-SMB, 50 OHM Rtang JK PC MT | 2536-0060 | Cablewave | 700214NP |
| J3 | Conn-SMB, 50 OHM Rtang JK PC MT | 2536-0060 | Cablewave | 700214NP |
| J4 | Conn-SMB, 50 OHM Rtang JK PC MT | 2536-0060 | Cablewave | 700214NP |
| | INDUCTORS | | | |
| L1 | Coil, Var | 1596-6602 | Cushman | |
| L2 | Coil, Var | 1596-6602 | Cushman | |
| L3 | RF Choke, 10μF, ±10% | 1585-0016 | Delevan | 1537-36 |
| L4 | RF Choke, 10μF, ±10% | 1585-0016 | Delevan | 1537-36 |
| L5 | Coil, Var | 1596-6604 | Cushman | |
| L6 | Coil, Var | 1596-6604 | Cushman | |
| L7 | Coil, Var | 1596-6604 | Cushman | |
| L8 | Coil, Var | 1596-6604 | Cushman | |
| L9 | RF Choke, 10μF, ±10% | 1585-0016 | Delevan | 1537-36 |
| L10 | RF Choke, 10μF, ±10% | 1585-0016 | Delevan | 1537-36 |
| L11 | Coil, Var | 1596-6502 | Cushman | |
| L12 | RF Choke, 10μF, ±10% | 1585-0016 | Delevan | 1537-36 |
| L13 | Coil, Var | 1596-6501 | Cushman | |
| L14 | Coil, Var | 1596-6602 | Cushman | |
| L15 | Choke, Ferrite Bead 3B | 1586-0002 | Miller | 4612 |

LOW PASS FILTER & FIRST MIXER, 3200 (cont.)

| CKT. REF. | DESCRIPTION | CE STOCK NO. | MFR. | MFR. NO. |
|---|---|---|---|---|
| L16 | Choke, Ferrite Bead 3B | 1586-0002 | Miller | 4612 |
| L17 | Choke, Ferrite Bead 3B | 1586-0002 | Miller | 4612 |
| L18 | Choke, Ferrite Bead 3B | 1586-0002 | Miller | 4612 |
| | TRANSISTORS | | | |
| Q1 | Si, NPN, 2N3563 | 1272-0022 | Fairchild | 2N3563 |
| Q2 | Si, NPN, 2N3563 | 1272-0022 | Fairchild | 2N3563 |
| Q3 | Si, NPN, 2N3866 | 1271-0005 | RCA | 2N3866 |
| Q4 | Si, NPN, 2N3563 | 1272-0022 | Fairchild | 2N3563 |
| Q5 | Si, NPN, 2N5179 | 1272-0060 | Motorola | 2N5179 |
| Q6 | Si, NPN, 2N5179 | 1272-0060 | Motorola | 2N5179 |
| Q7 | Si, NPN, 2N5179 | 1272-0060 | Motorola | 2N5179 |
| Q8 | Si, NPN, 2N3563 | 1272-0022 | Fairchild | 2N3563 |
| Q9 | Si, NPN, 2N3642 | 1272-0018 | Fairchild | 2N3642 |
| Q10 | Si, PNP, 2N3644 | 1272-0040 | Fairchild | 2N3644 |
| Q11 | Si, NPN, 2N5179 | 1272-0060 | Motorola | 2N5179 |
| Q12 | Si, NPN, 2N5962 | 1272-0059 | Fairchild | 2N5962 |
| Q13 | Si, PNP, 2N4121 | 1272-0023 | Fairchild | 2N4121 |
| Q14 | Si, NPN, 2N3904 | 1272-0032 | Motorola | 2N3904 |
| | RESISTORS | | | |
| R1 | Comp, 100Ω, ±5%, 1/4W | 1066-1015 | Allen-Bradley | CB1015 |
| R2 | Comp, 10K, ±5%, 1/4W | 1066-1035 | Allen-Bradley | CB1035 |
| R3 | Comp, 10K, ±5%, 1/4W | 1066-1035 | Allen-Bradley | CB1035 |
| R4 | Comp, 620Ω, ±5%, 1/4W | 1066-6215 | Allen-Bradley | CB6215 |
| R5 | Comp, 470Ω, ±5%, 1/4W | 1066-4715 | Allen-Bradley | CB4715 |
| R6 | Comp, 10K, ±5%, 1/4W | 1066-1035 | Allen-Bradley | CB1035 |
| R7 | Comp, 2.4K, ±5%, 1/4W | 1066-2425 | Allen-Bradley | CB2425 |
| R8 | Comp, 150Ω, ±5%, 1/4W | 1066-1515 | Allen-Bradley | CB1515 |
| R9 | Comp, 680Ω, ±5%, 1/4W | 1066-6815 | Allen-Bradley | CB6815 |
| R10 | Comp, 270Ω, ±5%, 1/4W | 1066-2715 | Allen-Bradley | CB2715 |
| R11 | Comp, 100Ω, ±5%, 1/4W | 1066-1015 | Allen-Bradley | CB1015 |
| R12 | Comp, 470Ω, ±5%, 1/4W | 1066-4715 | Allen-Bradley | CB4715 |
| R13 | Comp, 100Ω, ±5%, 1/4W | 1066-1015 | Allen-Bradley | CB1015 |
| R14 | Comp, 51Ω, ±5%, 1/4W | 1066-5105 | Allen-Bradley | CB5105 |
| R15 | Comp, 2K, ±5%, 1/4W | 1066-2025 | Allen-Bradley | CB2025 |
| R16 | Comp, 10K, ±5%, 1/4W | 1066-1035 | Allen-Bradley | CB1035 |
| R17 | Comp, 51Ω, ±5%, 1/4W | 1066-5105 | Allen-Bradley | CB5105 |
| R18 | Comp, 51Ω, ±5%, 1/4W | 1066-5105 | Allen-Bradley | CB5105 |
| R19 | MF, 654.4Ω, .25%, 1/10W, 25PPM | 1074-0024 | Allen-Bradley | MF4C0E |
| R20 | MF, 17.42Ω, .25%, 1/10W, 100PPM | 1074-0002 | Electra | MF4C0E |
| R21 | MF, 654.4Ω, .25%, 1/10W, 25PPM | 1074-0024 | Electra | MF4C0E |
| R22 | Comp, 39Ω, ±5%, 1/4W | 1066-3905 | Allen-Bradley | CB3905 |
| R23 | Comp, 100Ω, ±5%, 1/4W | 1066-1015 | Allen-Bradley | CB1015 |
| R24 | Comp, 1K, ±5%, 1/4W | 1066-1025 | Allen-Bradley | CB1025 |
| R25 | Comp, 1K, ±5%, 1/4W | 1066-1025 | Allen-Bradley | CB1025 |
| R26 | Comp, 20Ω, ±5%, 1/4W | 1066-2005 | Allen-Bradley | CB2005 |
| R27 | Comp, 100Ω, ±5%, 1/4W | 1066-1015 | Allen-Bradley | CB1015 |
| R28 | Comp, 2.7K, ±5%, 1/4W | 1066-2725 | Allen-Bradley | CB2725 |
| R29 | Pot, 100Ω, ±10%, 3/4W | 1215-0010 | Helitrim | 89WR |
| R30 | Comp, 1.6K, ±5%, 1/4W | 1066-1625 | Allen-Bradley | CB1625 |

LOW PASS FILTER & FIRST MIXER, 3200 (cont.)

| CKT. REF. | DESCRIPTION | CE STOCK NO. | MFR. | MFR. NO. |
|---|---|---|---|---|
| R31 | Comp, 100Ω, ±5%, 1/4W | 1066-1015 | Allen-Bradley | CB1015 |
| R32 | Comp, 1.3K, ±5%, 1/4W | 1066-1325 | Allen-Bradley | CB1325 |
| R33 | Comp, 51Ω, ±5%, 1/4W | 1066-5105 | Allen-Bradley | CB5105 |
| R34 | Comp, 150Ω, ±5%, 1/4W | 1066-1515 | Allen-Bradley | CB1515 |
| R35 | Comp, 75Ω, ±5%, 1/4W | 1066-7505 | Allen-Bradley | CB7505 |
| R36 | MF, 432Ω, ±1%, 1/10W, 100PPM | 1075-0142 | Electra | MF4C0E |
| R37 | MF, 432Ω, ±1%, 1/10W, 100PPM | 1075-0142 | Electra | MF4C0E |
| R38 | MF, 26.1Ω, ±1%, 1/10W, 25PPM | 1074-0024 | Electra | MF4C0E |
| R39 | Comp, 39Ω, ±5%, 1/4W | 1066-3905 | Allen-Bradley | CB3905 |
| R40 | Comp, 1K, ±5%, 1/4W | 1066-1025 | Allen-Bradley | CB1025 |
| R41 | Comp, 7.5K, ±5%, 1/4W | 1066-7525 | Allen-Bradley | CB7525 |
| R42 | Comp, 7.5K, ±5%, 1/4W | 1066-7525 | Allen-Bradley | CB7525 |
| R43 | Comp, 3.3K, ±5%, 1/4W | 1066-3325 | Allen-Bradley | CB3325 |
| R44 | Comp, 6.8K, ±5%, 1/4W | 1066-6825 | Allen-Bradley | CB6825 |
| R45 | Comp, 510Ω, ±5%, 1/4W | 1066-5115 | Allen-Bradley | CB5115 |
| R46 | Comp, 680Ω, ±5%, 1/4W | 1066-6815 | Allen-Bradley | CB6815 |
| R47 | Comp, 51K, ±5%, 1/4W | 1066-5135 | Allen-Bradley | CB5135 |
| R48 | Comp, 24K, ±5%, 1/4W | 1066-2435 | Allen-Bradley | CB2435 |
| R49 | Comp, 5.6K, 1/4W | 1066-5625 | Allen-Bradley | CB5625 |
| R50 | Comp, 3K, ±5%, 1/4W | 1066-3025 | Allen-Bradley | CB3025 |
| R51 | Comp, 1.6K, ±5%, 1/4W | 1066-1625 | Allen-Bradley | CB1625 |
| R52 | Comp, 1K, ±5%, 1/4W | 1066-1025 | Allen-Bradley | CB1025 |
| R53 | Comp, 100Ω, ±5%, 1/4W | 1066-1015 | Allen-Bradley | CB1015 |
| R54 | Comp, 3K, ±5%, 1/4W | 1066-3025 | Allen-Bradley | CB3025 |
| R55 | Comp, 5.1K, ±5%, 1/4W | 1066-5125 | Allen-Bradley | CB5125 |
| R56 | Comp, 100Ω, ±5%, 1/4W | 1066-1015 | Allen-Bradley | CB1015 |
| R57 | Comp, 3K, ±5%, 1/4W | 1066-3025 | Allen-Bradley | CB3025 |
| R58 | Comp, 75Ω, ±5%, 1/4W | 1066-7505 | Allen-Bradley | CB7505 |
| R59 | Comp, 100Ω, ±5%, 1/4W | 1066-1015 | Allen-Bradley | CB1015 |
| R60 | Comp, 100K, ±5%, 1/4W | 1066-1045 | Allen-Bradley | CB1045 |
| R61 | Comp, 1.3K, ±5%, 1/4W | 1066-1325 | Allen-Bradley | CB1325 |
| R62 | Comp, 100K, ±5%, 1/4W | 1066-1045 | Allen-Bradley | CB1045 |
| R63 | Comp, 100Ω, ±5%, 1/4W | 1066-1015 | Allen-Bradley | CB1015 |
| R64 | Comp, 100Ω, ±5%, 1/4W | 1066-1015 | Allen-Bradley | CB1015 |
| R65 | Comp, 1K, ±5%, 1/4W | 1066-1025 | Allen-Bradley | CB1025 |
| R66 | Comp, 10K, ±5%, 1/4W | 1066-1035 | Allen-Bradley | CB1035 |
| R67 | Comp, 10K, ±5%, 1/4W | 1066-1035 | Allen-Bradley | CB1035 |
| R68 | Comp, 100Ω, ±5%, 1/4W | 1066-1015 | Allen-Bradley | CB1015 |
| R69 | Comp, 10Ω, ±5%, 1/4W | 1066-1005 | Allen-Bradley | CB1005 |
| R70 | Comp, 10Ω, ±5%, 1/4W | 1066-1005 | Allen-Bradley | CB1005 |
| | TRANSFORMERS | | | |
| T1 | Coil, Trifilar | 1579-0017 | Cushman | |
| | INTEGRATED CIRCUITS | | | |
| U1 | IC-SN72741P, 8 PIN | 2025-0067 | Fairchild | SN72741P |
| | MIXER | | | |
| Z1 | Double Bal Hi Isolation | 2010-0004 | Cushman | |

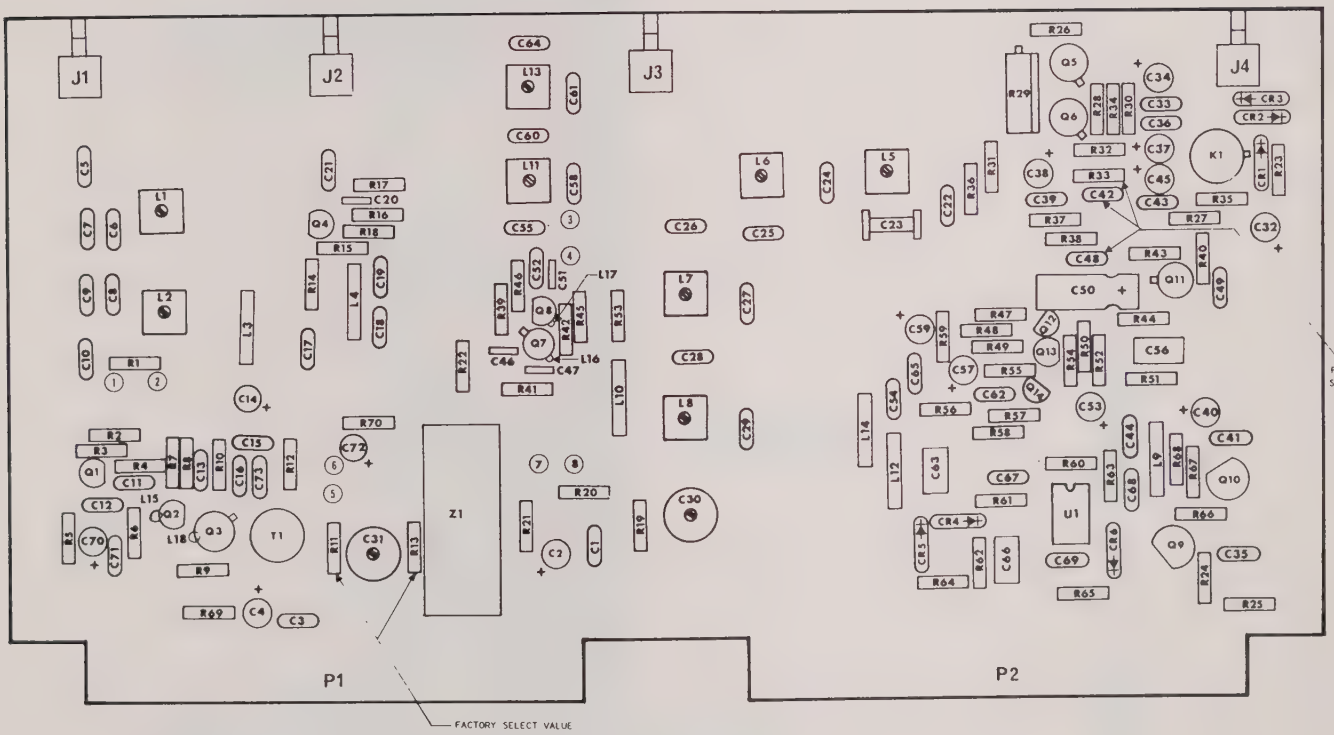
J1
J2
J3
J4
P1
P2
FACTORY SELECT
FACTORY SELECT VALUE

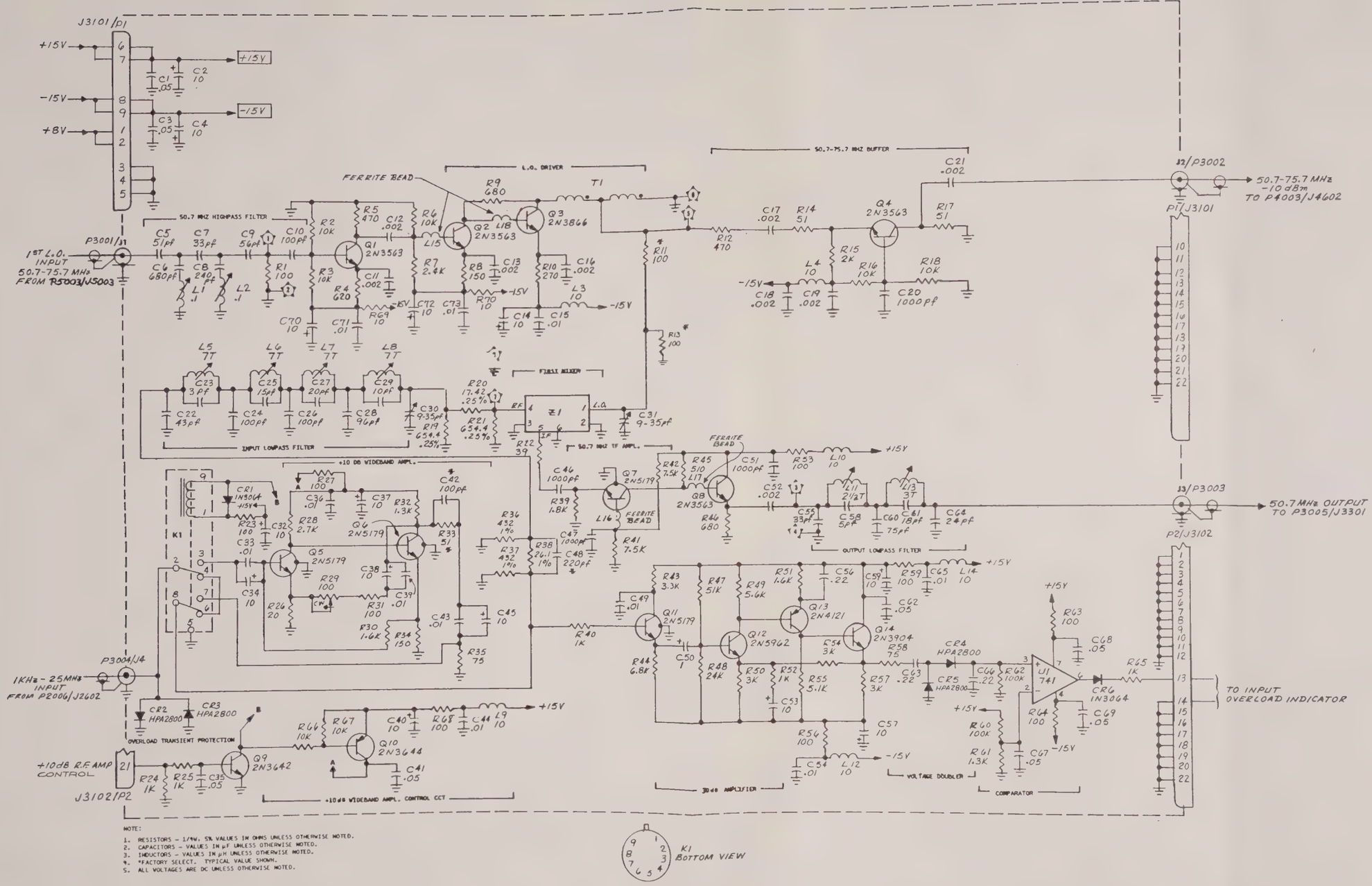


NOTE:

1. RESISTORS - 1/4W, 5% VALUES IN OHMS UNLESS OTHERWISE NOTED.
2. CAPACITORS - VALUES IN µF UNLESS OTHERWISE NOTED.
3. INDUCTORS - VALUES IN µH UNLESS OTHERWISE NOTED.
4. *FACTORY SELECT. TYPICAL VALUE SHOWN.
5. ALL VOLTAGES ARE DC UNLESS OTHERWISE NOTED.

5601**0063**3

Figure 20. Low Pass Filter & First Mixer, 3200.

FIRST I. F. & TIMES 4 MULTIPLIER, 3300

| CKT. REF. | DESCRIPTION | CE STOCK NO. | MFR. | MFR. NO. |
|---|---|---|---|---|
| 3300 | PCB Assy - 1st IF and X4 Multr | 7001-0289 | Cushman | |
| | P.C. Board | 1780-0546 | Cushman | |
| | CAPACITORS | | | |
| C1 | Cer, .05μF, +80-20%, 25V | 1005-0014 | Erie | 5855-505-Y5U0-503Z |
| C2 | Cer, .05μF, +80-20%, 25V | 1005-0014 | Erie | 5855-505-Y5U0-503Z |
| C3 | Tant, 10μF, +50-20%, 35V | 1011-0006 | ITT | TAG-10/35-20 |
| C4 | Tant, 10μF, +50-20%, 35V | 1011-0006 | ITT | TAG-10/35-20 |
| C5 | Cer, .002μF, ±20%, 500V | 1005-0003 | Erie | 831-596-25U-202M |
| C6 | Cer, .002μF, ±20%, 500V | 1005-0003 | Erie | 831-596-25U-202M |
| C7 | Cer, 1000pF, ±10%, 100V | 1005-0081 | Erie | 8121-100-W5R-102K |
| C8 | Cer, .002μF, ±20%, 500V | 1005-0003 | Erie | 831-596-25U-202M |
| C9 | Air Var, 1.3-5.4pF, PC MT | 1000-0012 | E.F. Johnson Co | 187-0103-005 |
| C10 | Cer, 1000pF, ±10%, 100V | 1005-0081 | Erie | 8121-100-W5R-102K |
| C11 | Air Var, 1.3-5.4pF, PC MT | 1000-0012 | E.F. Johnson Co | 187-0103-005 |
| C12 | Cer, .002μF, ±20%, 500V | 1005-0003 | Erie | 831-596-25U-202M |
| C13 | Cer, .002μF, ±20%, 500V | 1005-0003 | Erie | 831-596-25U-202M |
| C14 | Cer, .002μF, ±20%, 500V | 1005-0003 | Erie | 831-596-25U-202M |
| C15 | Cer, .002μF, ±20%, 500V | 1005-0003 | Erie | 831-596-25U-202M |
| C16 | Mica, 150pF, ±5%, 500V | 1002-0021 | Cornell-Dubilier | CD15F151J |
| C17 | Cer, 3.3pF, ±.25%pF, 500V | 1005-0011 | Erie | 301-000-C0J0-339C |
| C18 | Mica, 180pF, ±5%, 500V | 1002-0005 | Cornell-Dubilier | CD15FD181J |
| C19 | Mica, 18pF, ±5%, 500V | 1002-0014 | Cornell-Dubilier | CD15CD180J |
| C20 | Mica, 180pF, ±5%, 500V | 1002-0005 | Cornell-Dubilier | CD15FD181J |
| C21 | Mica, 12pF, ±5%, 500V | 1002-0017 | Cornell-Dubilier | CD15CD120J |
| C22 | Mica, 120pF, ±5%, 500V | 1002-0010 | Cornell-Dubilier | CD15FD121J03 |
| C23 | Mica, 27pF, ±5%, 500V | 1002-0008 | Cornell-Dubilier | CD15ED270J |
| C24 | Mica, 330pF, ±5%, 500V | 1002-0032 | Cornell-Dubilier | CD15FD331J |
| C25 | Mica, 75pF, ±5%, 500V | 1002-0025 | Cornell-Dubilier | CD15ED750J |
| C26 | Mica, 510pF, ±5%, 500V | 1002-0036 | Cornell-Dubilier | CD15FD511J |
| C27 | Cer, .01μF, +80-20%, 25V | 1005-0013 | Erie | 5835-512-Y5U-103Z |
| C28 | Mica, 270pF, ±5%, 500V | 1002-0031 | Cornell-Dubilier | CD15ED271J |
| C29 | Cer, .01μF, +80-20%, 25V | 1005-0013 | Erie | 5835-512-Y5U-103Z |
| C30 | Cer, .01 μF, +80-20%, 25V | 1005-0013 | Erie | 5835-512-Y5U-103Z |
| C31 | Cer, .01μF, +80-20%, 25V | 1005-0013 | Erie | 5835-512-Y512-103Z |
| C32 | Cer, .01μF, +80-20%, 25V | 1005-0013 | Erie | 5835-512-Y512-103Z |
| C33 | Cer, .002μF, ±20%, 500V | 1005-0003 | Erie | 831-596-25U-202M |
| C34 | Mica, 24pF, ±5%, 500V | 1002-0051 | Cornell-Dubilier | CD15CD240J |
| C35 | Mica, 56pF, ±5%, 500V | 1002-0019 | Cornell-Dubilier | CD15ED560J |

FIRST I. F. & TIMES 4 MULTIPLIER, 3300 (cont.)

| CKT. REF. | DESCRIPTION | CE STOCK NO. | MFR. | MFR. NO. |
|---|---|---|---|---|
| C36 | Mica, 24pF, ±5%, 500V | 1002-0051 | Cornell-Dubilier | CD15CD240J |
| C37 | Mica, 470pF, ±5%, 500V | 1002-0035 | Cornell-Dubilier | CD15FD471J |
| C38 | Mica, 39pF, ±5%, 500V | 1002-0018 | Cornell-Dubilier | CD15ED390J |
| C39 | Mica, 18pF, ±5%, 500V | 1002-0014 | Cornell-Dubilier | CD15CD180J |
| C40 | Mica, 18pF, ±5%, 500V | 1002-0014 | Cornell-Dubilier | CD15CD180J |
| C41 | Mica, 430pF, ±5%, 500V | 1002-0034 | Cornell-Dubilier | CD15FD431J |
| C42 | Mica, 43pF, ±5%, 500V | 1002-0046 | Cornell-Dubilier | CD15ED430J |
| C43 | Mica, 20pF, ±5%, 500V | 1002-0060 | Cornell-Dubilier | CD15ED200J |
| C44 | Mica, 12pF, ±5%, 500V | 1002-0017 | Cornell-Dubilier | CD15CD120J |
| C45 | Mica, 300pF, ±5%, 500V | 1002-0059 | Cornell-Dubilier | CD15ED301J |
| C46 | Mica, 68pF, ±5%, 500V | 1002-0013 | Cornell-Dubilier | CD15ED680J |
| C47 | Cer, .002μF, ±20%, 500V | 1005-0003 | Erie | 831-596-25μ-202M |
| C48 | Cer, .002μF, ±20%, 500V | 1005-0003 | Erie | 831-596-25μ-202M |
| C49 | Cer, .01μF, +80-20%, 25V | 1005-0013 | Erie | 5835-512-Y5U-103Z |
| C50 | Cer, .002μF, ±20%, 500V | 1005-0003 | Erie | 831-596-25μ-202M |
| C51 | Cer, .002μF, ±20%, 500V | 1005-0003 | Erie | 831-596-25μ-202M |
| C52 | Mica, 24pF, ±5%, 500V | 1002-0051 | Cornell-Dubilier | CD15CD240J |
| C53 | Cer, .002μF, ±20%, 500V | 1005-0003 | Erie | 831-596-25U-202M |
| C54 | Cer, .002μF, ±20%, 500V | 1005-0003 | Erie | 831-596-25U-202M |
| C55 | Cer, .01μF, +80-20%, 25V | 1005-0013 | Erie | 5835-51 -Y5U-103Z |
| | DIODES | | | |
| CR1 | Si, Signal, 1N3064, 75V. PIV | 1281-0013 | Teledyne | 1N3064 |
| | CONNECTORS | | | |
| J1 | SMB, 50 Ohm, Rtang, JK, PC MT Snap-On | 2536-0060 | Cablewave | 700214NP |
| J2 | SMB, 50 Ohm, Rtang, JK, PC MT Snap-On | 2536-0060 | Cablewave | 700214NP |
| | INDUCTORS | | | |
| L1 | RF Choke, 10μH, ±10% | 1585-0016 | Delevan | 1537-36 |
| L2 | Coil-Var | 1596-0218 | Cushman | |
| L3 | Coil-Var | 1596-0218 | Cushman | |
| L4 | Coil-Var | 1596-0218 | Cushman | |
| L5 | RF Choke, .82MH, ±10% | 1585-0061 | Delevan | 1537-10 |
| L6 | Choke, .68MH, ±10% | 1585-0024 | Delevan | 1537-08 |
| L7 | Coil-Var | 1596-6603 | Cushman | |
| L8 | Coil-Var | 1596-6603 | Cushman | |
| L9 | Coil-Var | 1596-6603 | Cushman | |
| L10 | Coil-Var | 1596-6603 | Cushman | |

FIRST I.F. & TIMES 4 MULTIPLIER, 3300 (cont.)

| CKT. REF. | DESCRIPTION | CE STOCK NO. | MFR. | MFR. NO. |
|---|---|---|---|---|
| L11 | Coil-Var | 1596-6604 | Cushman | |
| L12 | RF Choke, 10μH, ±10% | 1585-0016 | Delevan | 1537-36 |
| L13 | RF Choke, 10μH, ±10% | 1585-0016 | Delevan | 1537-36 |
| | TRANSISTORS | | | |
| Q1 | Si, NPN, 2N3563 | 1272-0022 | Fairchild | 2N3563 |
| Q2 | Si, NPN, 2N3563 | 1272-0022 | Fairchild | 2N3563 |
| Q3 | Si, NPN, 2N3563 | 1272-0022 | Fairchild | 2N3563 |
| Q4 | Si, NPN, 2N3904 | 1272-0032 | Motorola | 2N3904 |
| Q5 | Si, NPN, 2N3563 | 1272-0022 | Fairchild | 2N3563 |
| Q6 | Si, NPN, 2N4275 | 1272-0016 | Fairchild | 2N4275 |
| Q7 | Si, NPN, 2N3563 | 1272-0022 | Fairchild | 2N3563 |
| Q8 | Si, NPN, 2N3563 | 1272-0022 | Fairchild | 2N3563 |
| Q9 | Si, NPN, 2N3563 | 1272-0022 | Fairchild | 2N3563 |
| Q10 | Si, NPN, 2N3866 | 1271-0005 | Fairchild | 2N3866 |
| | RESISTORS | | | |
| R1 | Comp, 51Ω, ±5%, 1/4W | 1066-5105 | Allen-Bradley | CB5105 |
| R2 | Comp, 10K, ±5%, 1/4W | 1066-1035 | Allen-Bradley | CB1035 |
| R3 | Comp, 3.9K, ±5%, 1/4W | 1066-3925 | Allen-Bradley | CB3925 |
| R4 | MF, 619Ω, ±1%, 1/8W, 100PPM | 1075-0063 | Dale | MFF 1/8 |
| R5 | MF, 182Ω, ±1%, 1/10W, 150PPM | 1074-1014 | Dale | MFF 1/10 |
| R6 | Comp, 180Ω, ±5%, 1/4W | 1066-1815 | Allen-Bradley | CB1815 |
| R7 | Comp, FSV, ±5%, 1/4W | 1066-xxxx | Allen-Bradley | CBxxxx |
| R8 | THMS, 500Ω, ±10% | 1253-0003 | Veco | 25E2 |
| R9 | Comp, 100Ω, ±5%, 1/4W | 1066-1015 | Allen-Bradley | CB1015 |
| R10 | Comp, FSV, ±5%, 1/4W | 1066-xxxx | Allen-Bradley | CBxxxx |
| R11 | MF, 619Ω, ±10%, 1/8W, 100PPM | 1075-0063 | Dale | MFF 1/8 |
| R12 | Comp, 10K, ±5%, 1/4W | 1066-1035 | Allen-Bradley | CB1035 |
| R13 | Comp, 10K, ±5%, 1/4W | 1066-1035 | Allen-Bradley | CB1035 |
| R14 | Comp, 10Ω, ±5%, 1/4W | 1066-1005 | Allen-Bradley | CB1005 |
| R15 | Comp, 3.3K, ±5%, 1/4W | 1066-3325 | Allen-Bradley | CB3325 |
| R16 | Comp, 10Ω, ±5%, 1/4W | 1066-1005 | Allen-Bradley | CB1005 |
| R17 | Comp, 680Ω, ±5%, 1/4W | 1066-6815 | Allen-Bradley | CB6815 |
| R18 | Comp, 200Ω, ±5%, 1/4W | 1066-2015 | Allen-Bradley | CB2015 |
| R19 | Comp, 56Ω, ±5%, 1/4W | 1066-5605 | Allen-Bradley | CB5605 |
| R20 | Comp, 10K, 1/4W | 1066-1035 | Allen-Bradley | CB1035 |
| R21 | Comp, 10Ω, ±5%, 1/4W | 1066-1005 | Allen-Bradley | CB1005 |
| R22 | Comp, 10K, ±5%, 1/4W | 1066-1035 | Allen-Bradley | CB1035 |
| R23 | Comp, 3K, ±5%, 1/4W | 1066-3025 | Allen-Bradley | CB3025 |
| R24 | Comp, 100Ω, ±5%, 1/4W | 1066-1015 | Allen-Bradley | CB1015 |
| R25 | Comp, 510Ω, ±5%, | 1066-5115 | Allen-Bradley | CB5115 |
| R26 | Comp, 3.3K, ±5%, 1/4W | 1066-3325 | Allen-Bradley | CB3325 |
| R27 | Comp, 10K, ±5%, 1/4W | 1066-1035 | Allen-Bradley | CB1035 |
| R28 | Comp, 2.2K, ±5%, 1/4W | 1066-2225 | Allen-Bradley | CB2225 |
| R29 | Comp, 2K, ±5%, 1/4W | 1066-2025 | Allen-Bradley | CB2025 |
| R30 | Comp, 100Ω, ±5%, 1/4W | 1066-1015 | Allen-Bradley | CB1015 |
| R31 | Comp, 6.2K, ±5%, 1/4W | 1066-6225 | Allen-Bradley | CB6225 |
| R32 | Comp, 10K, ±5%, 1/4W | 1066-1035 | Allen-Bradley | CB1035 |
| R33 | Comp, 10Ω, ±5%, 1/4W | 1066-1005 | Allen-Bradley | CB1005 |
| R34 | Comp, 10K, ±5%, 1/4W | 1066-1035 | Allen-Bradley | CB1035 |
| R35 | Comp, 3.3K, ±5%, 1/4W | 1066-3325 | Allen-Bradley | CB3325 |

FIRST I. F. TIMES 4 MULTIPLIER, 3300 (cont.)

| CKT. REF. | DESCRIPTION | CE STOCK NO. | MFR. | MFR. NO. |
|---|---|---|---|---|
| R36 | Comp, 10Ω, ±5%, 1/4W | 1066-1005 | Allen-Bradley | CB1005 |
| R37 | Comp, 47Ω, ±5%, 1/4W | 1066-4705 | Allen-Bradley | CB4705 |
| R38 | Comp, 470Ω, ±5%, 1/4W | 1066-4715 | Allen-Bradley | CB4715 |
| R39 | Comp, 1.5K, ±5% | 1066-1525 | Allen-Bradley | CB1525 |
| R40 | Comp, 1.5K, ±5% | 1066-1525 | Allen-Bradley | CB1525 |
| R41 | Comp, 8.2K, 1/4W | 1066-8225 | Allen-Bradley | CB8225 |
| R42 | Comp, 6.2K, ±5%, 1/4W | 1066-6225 | Allen-Bradley | CB6225 |
| R43 | Comp, 100Ω, ±5%, 1/4W | 1066-1015 | Allen-Bradley | CB1015 |
| R44 | Comp, 330Ω, ±5%, 1/4W | 1066-3315 | Allen-Bradley | CB3315 |
| R45 | Comp, 100Ω, ±5%, 1/4W | 1066-1015 | Allen-Bradley | CB1015 |
| | CRYSTAL | | | |
| Y1 | Filter, Crystal, 50.7 MHz (3dB BW 15 kHz) | 1040-0032 | Cushman | |
| | MIXER | | | |
| Z1 | Mixer, Double Balanced | 2010-0005 | Cushman | |

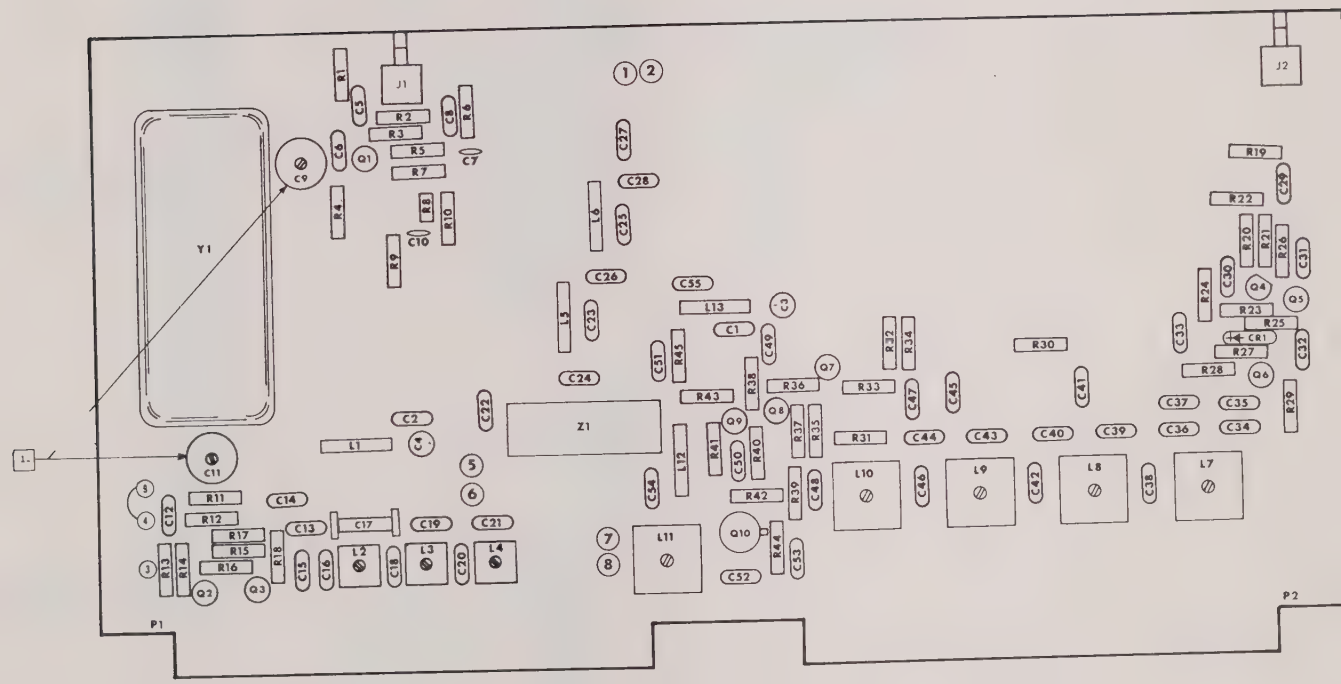


1. C9 AND C11 NOT INSTALLED IN CERTAIN UNITS.

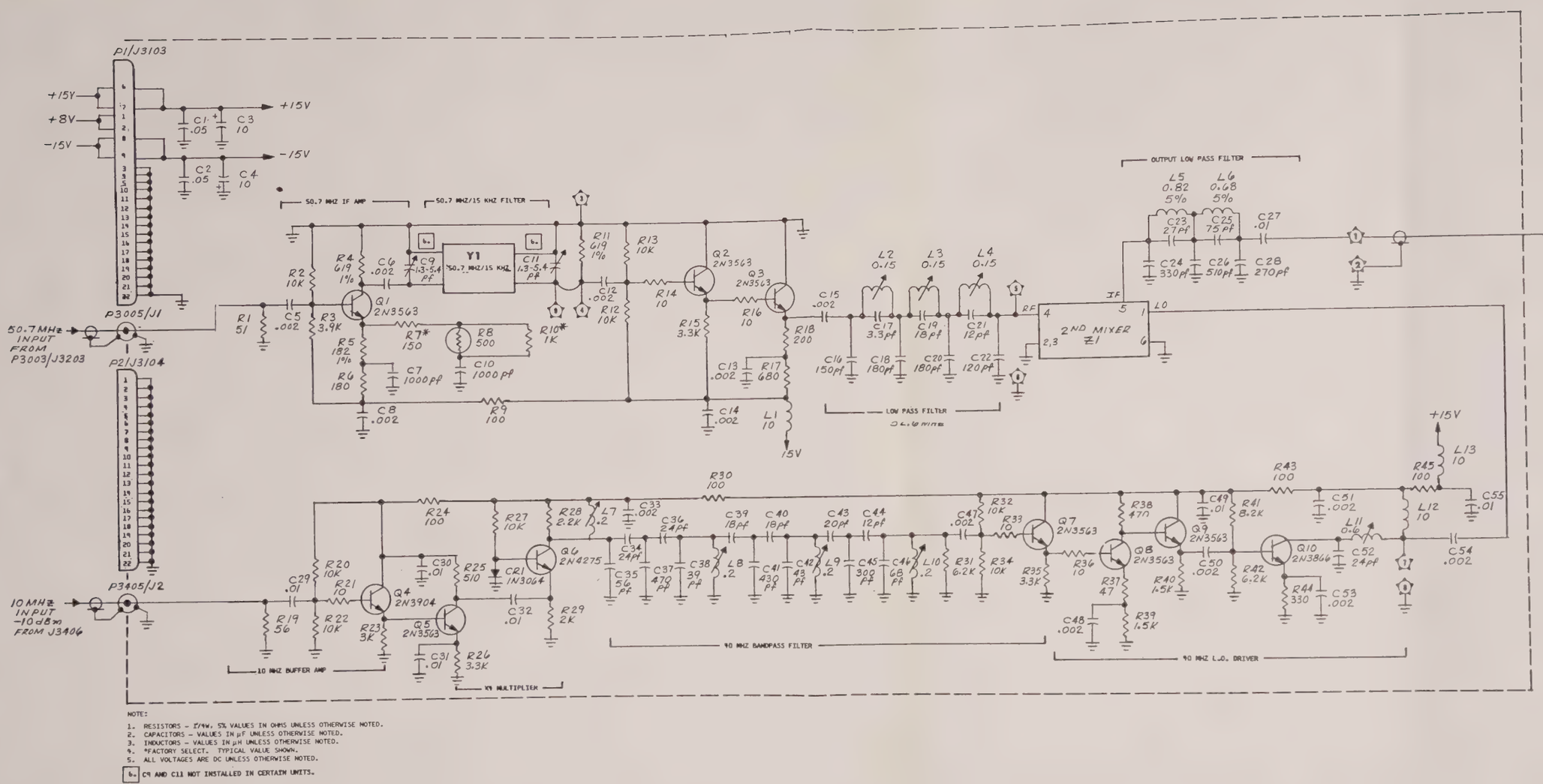


NOTE:

1. RESISTORS - 1/4W, 5% VALUES IN OHMS UNLESS OTHERWISE NOTED.
2. CAPACITORS - VALUES IN μF UNLESS OTHERWISE NOTED.
3. INDUCTORS - VALUES IN μH UNLESS OTHERWISE NOTED.
4. *FACTORY SELECT. TYPICAL VALUE SHOWN.
5. ALL VOLTAGES ARE DC UNLESS OTHERWISE NOTED.

6. C9 AND C11 NOT INSTALLED IN CERTAIN UNITS.



Figure 21. First I.F. & Times 4 Multiplier, 3300.

## 10 MHz REFERENCE/DIVIDER, 3400

| CKT. REF. | DESCRIPTION | CE STOCK NO. | MFR. | MFR. NO. |
|---|---|---|---|---|
| 3400 | 10 MHz Ref/Divider PCB Assy | 7001-0290 | Cushman | |
| | P.C. Board | 1780-0556 | Cushman | |
| | CAPACITORS | | | |
| C1 | Cer, .05μF, +80-20%, 25V | 1005-0014 | Erie | 5855-505-Y5U0-503Z |
| C2 | Cer, 10μF, +50-20%, 35V | 1011-0006 | ITT | TAG-10/35-20 |
| C3 | Cer, 100μF, ±10%, 25V | 1013-0003 | Sprague | 30D107G025DD5 |
| C4 | Cer, 100μF, ±10%, 25V | 1013-0003 | Sprague | 30D107G025DD5 |
| C5 | Cer, 100μF, ±10%, 25V | 1013-0003 | Sprague | 30D107G025DD5 |
| C6 | Cer, .05μF, +80-20%, 25V | 1005-0014 | Erie | 5855-505-Y5U0-503Z |
| C7 | Cer, .05μF, +80-20%, 25V | 1005-0014 | Erie | 5855-505-Y5U0-503Z |
| C8 | Cer, 10μF, +50-20%, 35V | 1011-0006 | ITT | TAG-10/35-20 |
| C9 | Cer, 10μF, +50-20%, 35V | 1011-0006 | ITT | TAG-10/35-20 |
| C10 | Cer, .05μF, +80-20%, 25V | 1005-0014 | Erie | 5855-505-Y5U0-503Z |
| C11 | Cer, 10μF, +50-20%, 35V | 1011-0006 | ITT | TAG-10/35-20 |
| C12 | Cer, .05μF, +80-20%, 25V | 1005-0014 | Erie | 5855-505-Y5U0-503Z |
| C13 | Cer, .05μF, +80-20%, 25V | 1005-0014 | Erie | 5855-505-Y5U0-503Z |
| C14 | Cer, .05μF, +80-20%, 25V | 1005-0014 | Erie | 5855-505-Y5U0-503Z |
| C15 | Cer, .05μF, +80-20%, 25V | 1005-0014 | Erie | 5855-505-Y5U0-503Z |
| C16 | Cer, .05μF, +80-20%, 25V | 1005-0014 | Erie | 5855-505-Y5U0-503Z |
| C17 | Mica, 43pF, ±5%, 500J | 1002-0046 | Elmenco | DM15-E-430J |
| C18 | Cer, .05μF, +80-20%, 25V | 1005-0014 | Erie | 5855-505-Y5U0-503Z |
| C19 | Cer, .05μF, +80-20%, 25V | 1005-0014 | Erie | 5855-505-Y5U0-503Z |
| C20 | Mica, 200pF, ±5%, 500V | 1002-0042 | Elmenco | DM15-F-201J |
| C21 | Not used | | | |
| C22 | Cer, .002μF, ±20%, 500V | 1005-0003 | Erie | 831-596-Z5U-202M |
| C23 | Cer, .002μF, ±20%, 500V | 1005-0003 | Erie | 831-596-Z5U-202M |
| C24 | Cer, .05μF, +80-20%, 25V | 1005-0014 | Erie | 5855-505-Y5U0-503Z |
| C25 | Cer, 3.3μF, ±10%, 15V | 1011-0008 | Kemet | K3R3C15K |
| C26 | Mica, 30pF, ±5%, 500V | 1002-0043 | Elmenco | DM15-E-300J |
| C27 | Cer, .05μF, +80-20%, 25V | 1005-0014 | Erie | 5855-505-Y5U0-503Z |
| C28 | Cer, 10μF, ±10%, 20V | 1011-0007 | Kemet | K10C20K |
| C29 | Cer, .05μF, +80-20%, 25V | 1005-0014 | Erie | 5855-505-Y5U0-503Z |
| C30 | Cer, .05μF, +80-20%, 25V | 1005-0014 | Erie | 5855-505-Y5U0-503Z |
| C31 | Cer, .05μF, +80-20%, 25V | 1005-0014 | Erie | 5855-505-Y5U0-503Z |
| C32 | Mica, 43pF, ±5%, 500V | 1002-0046 | Elmenco | DM15-E-430J |
| C33 | Cer, .002μF, ±20%, 500V | 1005-0003 | Erie | 831-596-Z5U-202M |
| C34 | Mica, 5pF, ±.5pF, 500V | 1002-0028 | Elmenco | DM15-C-050D |
| C35 | Cer, .002μF, ±20%, 500V | 1005-0003 | Erie | 831-596-Z5U-202M |
| C36 | Cer, .002μF, ±20%, 500V | 1005-0003 | Erie | 831-596-Z5U-202M |
| C37 | Mica, 96pF, ±1%, 500Vq | 1002-0049 | Elmenco | DM15-F-960F |
| C38 | Mica, 1000pF, ±5%, 100V | 1002-0015 | Elmenco | DM15-F-102J |
| C39 | Mica, 91pF, ±5%, 500V | 1002-0027 | Elmenco | DM15-F-910J |
| C40 | Cer, 1.5pF, .25pF%, 500V | 1005-0041 | Erie | 301-000-COKO-159C |
| C41 | Mica, 91pF, ±5%, 500V | 1002-0027 | Elmenco | DM15-F-910J |
| C42 | Mica, 5pF, ±.5pF, 500V | 1002-0028 | Elmenco | DM15-C-050D |
| C43 | Cer, .002μF, ±20%, 500V | 1005-0003 | Erie | 831-596-Z5U-202M |
| C44 | Cer, 10μF, +50-20%, 35V | 1011-0006 | ITT | TAG-10/35-20 |
| C45 | Cer, .002μF, ±20%, 500V | 1005-0003 | Erie | 831-596-Z5U-202M |
| C46 | Cer, .002μF, ±20%, 500V | 1005-0003 | Erie | 831-596-Z5U-202M |
| C47 | Cer, .002μF, ±20%, 500V | 1005-0003 | Erie | 831-596-Z5U-202M |
| C48 | Cer, .05μF, +80-20%, 25V | 1005-0014 | Erie | 5855-505-Y5U0-503Z |
| C49 | Cer, .05μF, +80-20%, 25V | 1005-0014 | Erie | 5855-505-Y5U0-503Z |
| C50 | Cer, .05μF, +80-20%, 25V | 1005-0014 | Erie | 5855-505-Y5U0-503Z |

10 MHz REFERENCE/DIVIDER, 3400 (cont.)

| CKT. REF. | DESCRIPTION | CE STOCK NO. | MFR. | MFR. NO. |
|---|---|---|---|---|
| C51 | Cer, .05μF, +80-20%, 25V | 1005-0014 | Erie | 5855-505-Y5U0-503Z |
| C52 | Mica, 43pF, ±5%, 500V | 1002-0046 | Elmenco | DM15-E-430J |
| C53 | Mica, 43pF, ±5%, 500V | 1002-0046 | Elmenco | DM15-E-430J |
| C54 | Cer, .05μF, +80-20%, 25V | 1005-0014 | Erie | 5855-505-Y5U0-503Z |
| C55 | Cer, .05μF, +80-20%, 25V | 1005-0014 | Erie | 5855-505-Y5U0-503Z |
| C56 | Cer, .05μF, +80-20%, 25V | 1005-0014 | Erie | 5855-505-Y5U0-503Z |
| C57 | Mica, 43pF, ±5%, 500V | 1002-0046 | Elmenco | DM15-E-430J |
| C58 | Cer, .05μF, +80-20, 25V | 1005-0014 | Erie | 5855-505-Y5U0- 103Z |
| C59 | Cer, .05μF, +80-20%, 25V | 1005-0014 | Erie | 5855-505-Y5U0- 103Z |
| C60 | Cer, .05μF, +80-20%, 25V | 1005-0014 | Erie | 5855-505-Y5U0- 103Z |
| C61 | Mica, 43pF, ±5%, 500V | 1002-0046 | Elmenco | DM15-E-430J |
| C62 | Cer, .05μF, +80-20%, 25V | 1005-0014 | Erie | 5855-505-Y5U0-103Z |
| C63 | Cer, .05μF, +80-20%, 25V | 1005-0014 | Erie | 5855-505-Y5U0-103Z |
| C64 | Cer, .002μF, ±20%, 500V | 1005-0003 | Erie | 831-596-25U-202M |
| C65 | Cer, .05μF, +80-20%, 25V | 1005-0014 | Erie | 5855-505-Y5U0-103Z |
| C66 | Cer, .05μF, +80-20%, 25V | 1005-0014 | Erie | 5855-505-Y5U0-103Z |
| C67 | Tant, 10μF, +50-20%, 35V | 1011-0006 | ITT | TAG-10/35-20 |
| C68 | Tant, 10μF, +50-20%, 35V | 1011-0006 | ITT | TAG-10/35-20 |
| C69 | Tant, 10μF, +50-20%, 35V | 1011-0006 | ITT | TAG-10/35-20 |
| C70 | Tant, 10μF, +50-20%, 35V | 1011-0006 | ITT | TAG-10/35-20 |
| C71 | Tant, 10μF, +50-20%, 35V | 1011-0006 | ITT | TAG-10/35-20 |
| C72 | Tant, 10μF, +50-20%, 35V | 1011-0006 | ITT | TAG-10/35-20 |
| C73 | Tant, 10μF, +50-20%, 35V | 1011-0006 | ITT | TAG-10/35-20 |
| C74 | Tant, 10μF, +50-20%, 35V | 1011-0006 | ITT | TAG-10/35-20 |
| C75 | Cer, .05μF, +80-20%, 25V | 1005-0014 | Erie | 5855-505-Y5U0-103Z |
| C76 | Cer, .05μF, +80-20%, 25V | 1005-0014 | Erie | 5855-505-Y5U0-103Z |
| C77 | Tant, 10μF, +50-20%, 35V | 1011-0006 | ITT | TAG-10/35-20 |
| C78 | Tant, 10μF, +50-20%, 35V | 1011-0006 | ITT | TAG-10/35-20 |
| C79 | Tant, 10μF, +50-20%, 35V | 1011-0006 | ITT | TAG-10/35-20 |
| C80 | Tant, 10μF, +50-20%, 35V | 1011-0006 | ITT | TAG-10/35-20 |
| C81 | Tant, 10μF, +50-20%, 35V | 1011-0006 | ITT | TAG-10/35-20 |
| | DIODE | | | |
| CR1 | Si, Signal 1N3064 | 1281-0013 | Teledyne | 1N3064 |
| | CONNECTORS | | | |
| J1 | Smb, 50 Ohm, Rtang, JK, PC, MT Snap-on | 2536-0060 | Cablewave | 700214NP |
| J2 | Smb, 50 Ohm, Rtang, JK, PC, MT, Snap-on | 2536-0060 | Cablewave | 700214NP |
| | INDUCTORS | | | |
| L1 | Choke, 6.8μH, ±10% | 1585-0015 | Delevan | 1537-32 |
| L2 | Coil, Var | 1596-8102 | Cushman | |
| L3 | Coil, Var | 1596-8102 | Cushman | |
| L4 | Coil, Var | 1596-8102 | Cushman | |
| L5 | Choke, 6.8μH, ±10% | 1585-0015 | Delevan | 1537-32 |
| L6 | Choke, 6.8μH, ±10% | 1585-0015 | Delevan | 1537-32 |
| L7 | Choke, 6.8μH, ±10% | 1585-0015 | Delevan | 1537-32 |
| L8 | Choke, 6.8μH, ±10% | 1585-0015 | Delevan | 1537-32 |
| L9 | Choke, 6.8μH, ±10% | 1585-0015 | Delevan | 1537-32 |
| L10 | Choke, 2-1/2, Turns Wide Band | 1586-0003 | Cushman | |

## 10 MHz REFERENCE/DIVIDER, 3400 (cont.)

| CKT. REF. | DESCRIPTION | CE STOCK NO. | MFR. | MFR. NO. |
|---|---|---|---|---|
| | TRANSISTORS | | | |
| Q1 | Si, NPN, 2N4275 | 1272-0016 | Fairchild | 2N4275 |
| Q2 | Si, PNP, 2N4121 | 1272-0023 | Fairchild | 2N4121 |
| Q3 | Si, NPN, 2N3904 | 1272-0032 | Motorola | 2N3904 |
| Q4 | Si, NPN, 2N3904 | 1272-0032 | Motorola | 2N3904 |
| Q5 | Si, NPN, 2N3904 | 1272-0032 | Motorola | 2N3904 |
| Q6 | Si, PNP, 2N4121 | 1272-0023 | Fairchild | 2N4121 |
| Q7 | Si, NPN, 2N3563 | 1272-0022 | Fairchild | 2N3563 |
| Q8 | Si, NPN, 2N3563 | 1272-0022 | Fairchild | 2N3563 |
| Q9 | Si, NPN, 2N3563 | 1272-0022 | Fairchild | 2N3563 |
| Q10 | Si, NPN, 2N3563 | 1272-0022 | Fairchild | 2N3563 |
| Q11 | Si, NPN, 2N3563 | 1272-0022 | Fairchild | 2N3563 |
| Q12 | Si, PNP, 2N4121 | 1272-0023 | Fairchild | 2N4121 |
| Q13 | Si, PNP, 2N4121 | 1272-0023 | Fairchild | 2N4121 |
| Q14 | Si, PNP, 2N4121 | 1272-0023 | Fairchild | 2N4121 |
| Q15 | Si, PNP, 2N4121 | 1272-0023 | Fairchild | 2N4121 |
| | RESISTORS | | | |
| R1 | Comp, 22K, ±5%, 1/4W | 1066-2235 | Allen-Bradley | CB2235 |
| R2 | Comp, 1K, ±5%, 1/4W | 1066-1025 | Allen-Bradley | CB1025 |
| R3 | Comp, 200 Ohm, ±5%, 1/4W | 1066-2015 | Allen-Bradley | CB2015 |
| R4 | Comp, 100 Ohm, ±5%, 1/4W | 1066-1015 | Allen-Bradley | CB1015 |
| R5 | Comp, 1K, ±5%, 1/4W | 1066-1025 | Allen-Bradley | CB1025 |
| R6 | Comp, 100 Ohm, ±5%, 1/4W | 1066-1015 | Allen-Bradley | CB1015 |
| R7 | Comp, 22K, ±5%, 1/4W | 1066-2235 | Allen-Bradley | CB2235 |
| R8 | Comp, 3K, ±5%, 1/4W | 1066-3025 | Allen-Bradley | CB3025 |
| R9 | Comp, 10Ω, ±5%, 1/4W | 1066-1015 | Allen-Bradley | CB1015 |
| R10 | Comp, 10Ω, ±5%, 1/4W | 1066-1005 | Allen-Bradley | CB1005 |
| R11 | Comp, 10Ω, ±5%, 1/4W | 1066-1005 | Allen-Bradley | CB1005 |
| R12 | Comp, 10Ω, ±5%, 1/4W | 1066-1005 | Allen-Bradley | CB1005 |
| R13 | Comp, 51 Ohm, ±5%, 1/4W | 1066-5105 | Allen-Bradley | CB5105 |
| R14 | Comp, 10 Ohm, ±5%, 1/4W | 1066-1005 | Allen-Bradley | CB1005 |
| R15 | Comp, 330 Ohm, ±5%, 1/4W | 1066-3315 | Allen-Bradley | CB3315 |
| R16 | Comp, 1K, ±5%, 1/4W | 1066-1025 | Allen-Bradley | CB1025 |
| R17 | Comp, 1K, ±5%, 1/4W | 1066-1025 | Allen-Bradley | CB1025 |
| R18 | Comp, 43 Ohm, ±5%, 1/4W | 1066-4305 | Allen-Bradley | CB4305 |
| R19 | MF, 75K, ±1%, 1/8W, 100PPM | 1075-0135 | Dale | MFF 1/8 |
| R20 | MF, 51.1K, ±1%, 1/8W, 100PPM | 1075-0099 | Dale | MFF 1/8 |
| R21 | Comp, 100 Ohm, ±5%, 1/4W | 1066-1015 | Allen-Bradley | CB1015 |
| R22 | Comp, 100 Ohm, ±5%, 1/4W | 1066-1015 | Allen-Bradley | CB1015 |
| R23 | Comp, 100 Ohm, ±5%, 1/4W | 1066-1015 | Allen-Bradley | CB1015 |
| R24 | Comp, 470 Ohm, ±5%, 1/4W | 1066-4715 | Allen-Bradley | CB4715 |
| R25 | Comp, 22K, ±5%, 1/4W | 1066-2235 | Allen-Bradley | CB2235 |
| R26 | Comp, 3K, ±5%, 1/4W | 1066-3025 | Allen-Bradley | CB3025 |
| R27 | Comp, 100 Ohm, ±5%, 1/4W | 1066-1015 | Allen-Bradley | CB1015 |
| R28 | Comp, 100 Ohm, ±5%, 1/4W | 1066-1015 | Allen-Bradley | CB1015 |
| R29 | Comp, 330 Ohm, ±5%, 1/4W | 1066-3315 | Allen-Bradley | CB3315 |
| R30 | Comp, 10K, ±5%, 1/4W | 1066-1035 | Allen-Bradley | CB1035 |
| R31 | Comp, 10K, ±5%, 1/4W | 1066-1035 | Allen-Bradley | CB1035 |
| R32 | Comp, 510 Ohm, ±5%, 1/4W | 1066-5115 | Allen-Bradley | CB5115 |
| R33 | Comp, 1.8K, ±5%, 1/4W | 1066-1825 | Allen-Bradley | CB1825 |
| R34 | Comp, 39 Ohm, ±5%, 1/4W | 1066-3905 | Allen-Bradley | CB3905 |
| R35 | Comp, 12K, ±5%, 1/4W | 1066-1235 | Allen-Bradley | CB1235 |

**10 MHz REFERENCE/DIVIDER, 3400 (cont.)**

| CKT. REF. | DESCRIPTION | CE STOCK NO. | MFR. | MFR. NO. |
|---|---|---|---|---|
| R36 | Comp, 10 Ohm, ±5%, 1/4W | 1066-1005 | Allen-Bradley | CB1005 |
| R37 | Comp, 1.8K, ±5%, 1/4W | 1066-1825 | Allen-Bradley | CB1825 |
| R38 | Comp, 10K, ±5%, 1/4W | 1066-1035 | Allen-Bradley | CB1035 |
| R39 | Comp, 100 Ohm, ±5%, 1/4W | 1066-1015 | Allen-Bradley | CB1015 |
| R40 | Comp, 390 Ohm, ±5%, 1/4W | 1066-3915 | Allen-Bradley | CB3915 |
| R41 | Comp, 10K, ±5%, 1/4W | 1066-1035 | Allen-Bradley | CB1035 |
| R42 | Comp, 100 Ohm, ±5%, 1/4W | 1066-1015 | Allen-Bradley | CB1015 |
| R43 | Comp, 10K, ±5%, 1/4W | 1066-1035 | Allen-Bradley | CB1035 |
| R44 | Comp, 3.3K, ±5%, 1/4W | 1066-3325 | Allen-Bradley | CB3325 |
| R45 | Comp, 100 Ohm, ±5%, 1/4W | 1066-1015 | Allen-Bradley | CB1015 |
| R46 | Comp, 180 Ohm, ±5%, 1/4W | 1066-1815 | Allen-Bradley | CB1815 |
| R47 | Comp, 680 Ohm, ±5%, 1/4W | 1066-6815 | Allen-Bradley | CB6815 |
| R48 | Comp, 510 Ohm, ±5%, 1/4W | 1066-5115 | Allen-Bradley | CB5115 |
| R49 | Comp, 51 Ohm, ±5%, 1/4W | 1066-5105 | Allen-Bradley | CB5105 |
| R50 | Comp, 56 Ohm, ±5%, 1/4W | 1066-5605 | Allen-Bradley | CB5605 |
| R51 | Comp, 56 Ohm, ±5%, 1/4W | 1066-5605 | Allen-Bradley | CB5605 |
| R52 | Comp, 180 Ohm, ±5%, 1/4W | 1066-1815 | Allen-Bradley | CB1815 |
| R53 | Comp, 180 Ohm, ±5%, 1/4W | 1066-1815 | Allen-Bradley | CB1815 |
| R54 | Comp, 100 Ohm, ±5%, 1/4W | 1066-1015 | Allen-Bradley | CB1015 |
| R55 | Comp, 510 Ohm, ±5%, 1/4W | 1066-5115 | Allen-Bradley | CB5115 |
| R56 | Comp, 100 Ohm, ±5%, 1/4W | 1066-1015 | Allen-Bradley | CB1015 |
| R57 | Comp, 510 Ohm, ±5%, 1/4W | 1066-5115 | Allen-Bradley | CB5115 |
| R58 | Comp, 3K, ±5%, 1/4W | 1066-3025 | Allen-Bradley | CB3025 |
| R59 | Comp, 100 Ohm, ±5%, 1/4W | 1066-1015 | Allen-Bradley | CB1015 |
| R60 | Comp, 3K, ±5%, 1/4W | 1066-3025 | Allen-Bradley | CB3025 |
| R61 | Comp, 100 Ohm, ±5%, 1/4W | 1066-1015 | Allen-Bradley | CB1015 |
| R62 | Comp, 22K, ±5%, 1/4W | 1066-2235 | Allen-Bradley | CB2235 |
| R63 | Comp, 22K, ±5%, 1/4W | 1066-2235 | Allen-Bradley | CB2235 |
| R64 | Comp, 22K, ±5%, 1/4W | 1066-2235 | Allen-Bradley | CB2235 |
| R65 | Comp, 3K, ±5%, 1/4W | 1066-3025 | Allen-Bradley | CB3025 |
| R66 | Comp, 100Ω, ±5%, 1/4W | 1066-1015 | Allen-Bradley | CB1015 |
| R67 | Comp, 510 Ohm, ±5%, 1/4W | 1066-5115 | Allen-Bradley | CB5115 |
| R68 | Comp, 100 Ohm, ±5%, 1/4W | 1066-1015 | Allen-Bradley | CB1015 |
| R69 | Comp, 3K, ±5%, 1/4W | 1066-3025 | Allen-Bradley | CB3025 |
| R70 | Comp, 22K, ±5%, 1/4W | 1066-2235 | Allen-Bradley | CB2235 |
| R71 | Comp, 100 Ohm, ±5%, 1/4W | 1066-1015 | Allen-Bradley | CB1015 |
| R72 | Comp, 100 Ohm, ±5%, 1/4W | 1066-1015 | Allen-Bradley | CB1015 |
| R73 | Comp, 510 Ohm, ±5%, 1/4W | 1066-5115 | Allen-Bradley | CB5115 |
| R74 | Comp, 180 Ohm, ±5%, 1/4W | 1066-1815 | Allen-Bradley | CB1815 |
| R75 | Comp, 56 Ohm, ±5%, 1/4W | 1066-5605 | Allen-Bradley | CB5605 |
| R76 | Comp, 180 Ohm, ±5%, 1/4W | 1066-1815 | Allen-Bradley | CB1815 |
| R77 | Comp, 56 Ohm, ±5%, 1/4W | 1066-5605 | Allen-Bradley | CB5605 |
| R78 | Comp, 10Ω, ±5%, 1/4W | 1066-1005 | Allen-Bradley | CB1005 |
| R79 | Comp, 10Ω, ±5%, 1/4W | 1066-1005 | Allen-Bradley | CB1005 |
| R80 | Comp, 10Ω, ±5%, 1/4W | 1066-1005 | Allen-Bradley | CB1005 |
| R81 | Comp, 10Ω, ±5%, 1/4W | 1066-1005 | Allen-Bradley | CB1005 |
| R82 | Comp, 10Ω, ±5%, 1/4W | 1066-1005 | Allen-Bradley | CB1005 |
| R83 | Comp, 10Ω, ±5%, 1/4W | 1066-1005 | Allen-Bradley | CB1005 |

10 MHz REFERENCE/DIVIDER, 3400 (cont.)

| CKT. REF. | DESCRIPTION | CE STOCK NO. | MFR. | MFR. NO. |
|---|---|---|---|---|
| | INTEGRATED CIRCUITS | | | |
| U1 | IC-SN7472N, TTL, Dual Flip-Flop | 2025-0007 | T.I. | SN7472N |
| U2 | IC-SN7490N, Decade Divider | 2025-0002 | T.I. | SN7490N |
| U3 | IC-SN7490N, Decade Divider | 2025-0002 | T.I. | SN7490N |
| U4 | IC-SN7490N, Decade Divider | 2025-0002 | T.I. | SN7490N |
| U5 | IC-SN7490N, Decade Divider | 2025-0002 | T.I. | SN7490N |
| U6 | IC-SN74L00N, TTL NAND Gates | 2025-0036 | T.I. | SN74L00N |
| U7 | IC-SN74L00N, TTL NAND Gates | 2025-0036 | T.I. | SN74L00N |
| U8 | IC-SN7400N, TTL NAND Gates | 2025-0003 | T.I. | SN7400N |
| U9 | IC-LM308N, Op, Ampl, 8 Pin | 2025-0070 | National | LM308N |
| U10 | IC-MC7805CP, 5V, Pos, Rgltr | 2025-0088 | Motorola | MC7805CP |
| | CRYSTAL | | | |
| Y1 | Osc-Tcxo, 10.0 MHz | 2001-0003 | Cushman | |

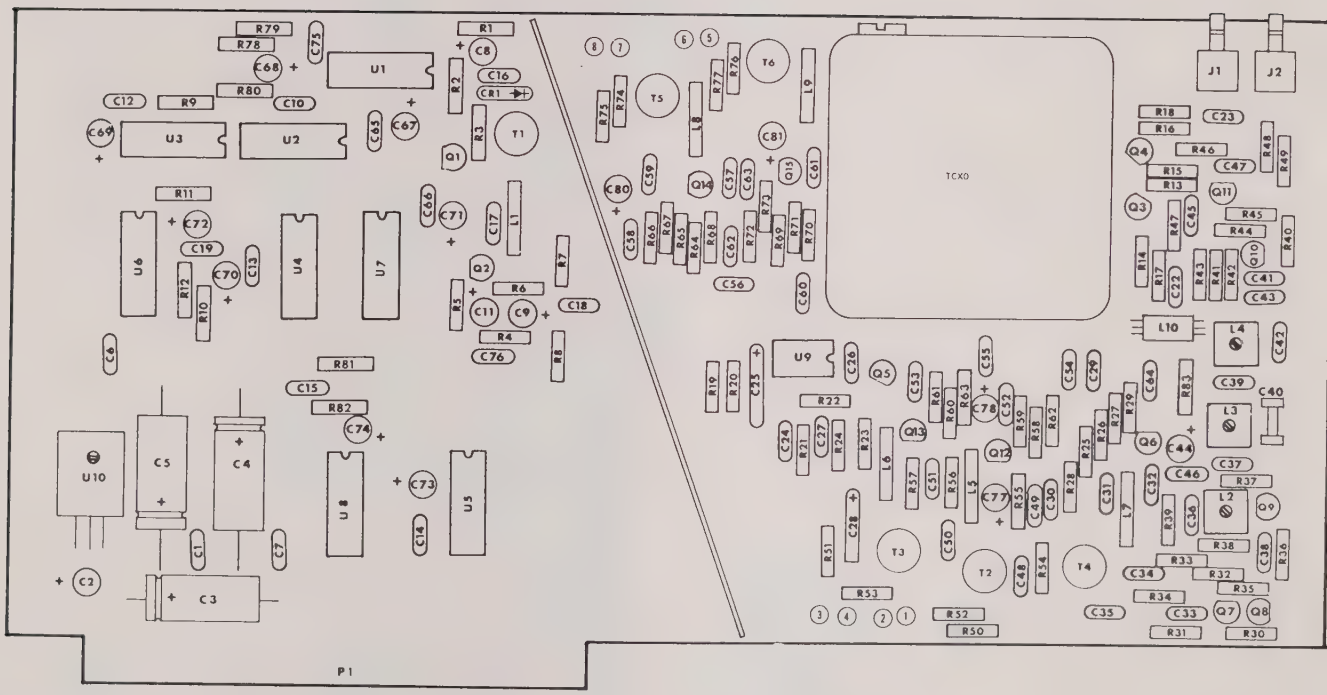
TCXO
P1

| U NO. | TYPE |
|---|---|
| 1 | SN7472N |
| 2,3,4,5 | SN7490N |
| 6,7 | SN74L00N |
| 8 | SN7400N |
| 9 | LM308 |
| 10 | MC7805 |

C20 & C21 NOT USED

NOTE:
1. RESISTORS - 1/4W, 5% VALUES IN OHMS UNLESS OTHERWISE NOTED.
2. CAPACITORS - VALUES IN μF UNLESS OTHERWISE NOTED.
3. INDUCTORS - VALUES IN μH UNLESS OTHERWISE NOTED.
4. *FACTORY SELECT. TYPICAL VALUE SHOWN.
5. ALL VOLTAGES ARE DC UNLESS OTHERWISE NOTED.

5601-0063-3

Figure 22. 10 MHz Reference/Divider, 3400.

## HIGH FREQUENCY PHASE LOCK LOOP, 3500

| CKT. REF. | DESCRIPTION | CE STOCK NO. | MFR. | MFR. NO. |
|---|---|---|---|---|
| 3500 | High Frequency PLL PCB Assy | 7001-0291 | Cushman | |
| | P.C. Board | 1780-0541 | Cushman | |
| | CAPACITORS | | | |
| C1 | Cer, .05μF, +80-20%, 25V | 1005-0014 | Erie | 5855-505-Y5U0-503Z |
| C2 | Cer, .05μF, +80-20%, 25V | 1005-0014 | Erie | 5855-505-Y5U0-503Z |
| C3 | Cer, .05μF, +80-20%, 25V | 1005-0014 | Erie | 5855-505-Y5U0-503Z |
| C4 | Cer, .05μF, +80-20%, 25V | 1005-0014 | Erie | 5855-505-Y5U0-503Z |
| C5 | Cer, .05μF, +80-20%, 25V | 1005-0014 | Erie | 5855-505-Y5U0-503Z |
| C6 | Tant, 10μF, +50-20%, 35V | 1011-0006 | ITT | TAG-10/35-20 |
| C7 | Cer, .002μF, ±20%, 500V | 1005-0003 | Erie | 831-596-25U-202M |
| C8 | Tant, 10μF, +50-20%, 35V | 1011-0006 | ITT | TAG-10/35-20 |
| C9 | Cer, .05μF, +80-20%, 25V | 1005-0014 | Erie | 5855-505-Y5U0-503Z |
| C10 | Mica, 87pF, ±1%, 500V | 1002-0047 | Elmenco | DM15-E-870F |
| C11 | Mica, 220pF, ±5%, 500V | 1002-0029 | Elmenco | DM15-F-221J |
| C12 | Poly, .0022μF, ±10%, 100V | 1008-0020 | Sprague | 225P22291WA3 |
| C13 | Poly, .022μF, ±10%, 100V | 1008-0034 | Sprague | 225P22391WA3 |
| C14 | Tant, 10μF, +50-20%, 35V | 1008-0006 | ITT | TAG-10/35-20 |
| C15 | Mica, 87pF, ±10%, 500V | 1002-0047 | Elmenco | DM15-E-870F |
| C16 | Poly, .39μF, +10%, 200V | 1008-0037 | Electrocube | 625B1C3941K2 |
| C17 | Cer, .05μF, +80-20%, 25V | 1005-0014 | Erie | 5855-505-Y5U0-503Z |
| C18 | Cer, .05μF, +80-20%, 25V | 1005-0014 | Erie | 5855-505-Y5U0-503Z |
| C19 | Mica, 30pF, ±5%, 500V | 1002-0043 | Elmenco | DM15-E-300J |
| C20 | Tant, 10μF, +50-20%, 35V | 1011-0006 | ITT | TAG-10/35-20 |
| C21 | Cer, .05μF, +80-20%, 25V | 1005-0014 | Erie | 5855-505-Y5U0-503Z |
| C22 | Tant, 10μF, +50-20%, 35V | 1011-0006 | ITT | TAG-10/35-20 |
| C23 | Mica, 56pF, ±5%, 500V | 1002-0019 | Elmenco | DM15-E-560J |
| C24 | Tant, 10μF, +50-20%, 35V | 1011-0006 | ITT | TAG-10/35-20 |
| C25 | Cer, .05μF, +80-20%, 25V | 1005-0014 | Erie | 5855-505-Y5U0-503Z |
| C26 | Cer, .01μF, +80-20%, 25V | 1005-0013 | Erie | 5835-512-Y5U-103Z |
| C27 | Mica, 470pF, ±5%, 500V | 1002-0035 | Elmenco | DM15-F-471J |
| C28 | Mica, 1000pF, ±5%, 100V | 1002-0015 | Elmenco | DM15-F-102J |
| C29 | Tant, 10μF, +50-20%, 35V | 1011-0006 | ITT | TAG-10/35-20 |
| C30 | Cer, .05μF, +80-20%, 25V | 1005-0014 | Erie | 5855-505-Y5U0-503Z |
| C31 | Mica, 1000pF, ±5%, 100V | 1002-0015 | Elmenco | DM15-F-102J |
| C32 | Tant, 10μF, +50-20%, 35V | 1011-0006 | ITT | TAG-10/35-20 |
| C33 | Mica, 1000pF, ±5%, 100V | 1002-0015 | Elmenco | DM15-F-102J |
| C34 | Mica, 5pF, ±.5pF, 500V | 1002-0028 | Elmenco | DM15-C-050D |
| C35 | Cer, .002μF, ±20%, 500V | 1005-0003 | Erie | 831-596-Z5U-202M |
| C36 | Mica, 5pF, ±.5pF, 500V | 1002-0028 | Elmenco | DM15-C-050D |
| C37 | Cer, .002μF, ±20%, 500V | 1005-0003 | Erie | 831-596-25U-202M |
| C38 | Cer, .002μF, ±20%, 500V | 1005-0003 | Erie | 831-596-25U-202M |
| C39 | Tant, 10μF, +50-20%, 35V | 1011-0006 | ITT | TAG-10/35-20 |
| C40 | Mica, 300pF, ±5%, 500V | 1002-0059 | Elmenco | DM15-301J |
| C41 | Mica, 300pF, ±5%, 500V | 1002-0059 | Elmenco | DM15-301J |
| C42 | Cer, .05μF, +80-20%, 25V | 1005-0014 | Erie | 5855-505-Y5U0-503Z |
| C43 | Cer, .002μF, +20%, 500V | 1005-0003 | Erie | 831-596-Z5U-202M |
| C44 | Cer, .002μF, ±20%, 500V | 1005-0003 | Erie | 831-596-Z5U-202M |
| C45 | Mica, 1000pF, ±5%, 100V | 1002-0015 | Elmenco | DM15-F-102J |
| C46 | Mica, 56pF, ±5%, 500V | 1002-0019 | Elmenco | DM15-E-560J |
| C47 | Mica, 56pF, ±5%, 500V | 1002-0019 | Elmenco | DM15-E-560J |
| C48 | Mica, 10pF, ±5%, 500V | 1002-0016 | Elmenco | DM15-C-100J |
| C49 | Mica, 1000pF, ±5%, 100V | 1002-0015 | Elmenco | DM15-F-102J |
| C50 | Mica, 10pF, ±5%, 500V | 1002-0016 | Elmenco | DM15-C-100J |

HIGH FREQUENCY PHASE LOCK LOOP, 3500 (cont.)

| CKT. REF. | DESCRIPTION | CE STOCK NO. | MFR. | MFR. NO. |
|---|---|---|---|---|
| C51 | Mica, 120pF, ±5%, 500V | 1002-0010 | Elmenco | DM15-F-121J |
| C52 | Mica, 120pF, ±5%, 500V | 1002-0010 | Elmenco | DM15-F-121J |
| C53 | Mica, 120pF, ±5%, 500V | 1002-0010 | Elmenco | DM15-F-121J |
| C54 | Mica, 120pF, ±5%, 500V | 1002-0010 | Elmenco | DM15-F-121J |
| C55 | Cer, .002μF, ±20%, 500V | 1005-0003 | Erie | 831-596-Z5U-202M |
| C56 | Mica, 1000pF, ±5%, 100V | 1002-0015 | Elmenco | DM15-F-102J |
| C57 | Cer, .002μF, ±20%, 500V | 1005-0003 | Erie | 831-596-Z5U-202M |
| C58 | Mica, 1000pF, ±5%, 100V | 1002-0015 | Elmenco | DM15-F-102J |
| C59 | Cer, .002μF, ±20%, 500V | 1005-0003 | Erie | 831-596-Z5U-202M |
| C60 | Mica, 1000pF, ±5%, 100V | 1002-0015 | Elmenco | DM15-F-102J |
| C61 | Cer, .05μF, +80-20%, 25V | 1005-0014 | Erie | 5855-505-Y5U0-503Z |
| C62 | Tant, 10μF, +50-20%, 35V | 1011-0006 | ITT | TAG-10/35-20 |
| C63 | Mica, 1000pF, ±5%, 100V | 1002-0015 | Elmenco | DM-5-F-102J |
| C64 | Tant, 10μF, +50-20%, 35V | 1011-0006 | ITT | TAG-10/35-20 |
| C65 | Mica, 30pF, ±5%, 500V | 1002-0043 | Elmenco | DM15-E-300J |
| C66 | Poly, .1μF, ±10%, 100V | 1008-0031 | Sprague | 225P10491WA3 |
| C67 | Mica, 300pF, ±5%, 500V | 1002-0059 | Elmenco | DM15-301J |
| C68 | Mica, 1000pF, ±5%, 100V | 1002-0015 | Elmenco | DM15-F-102J |
| C69 | Mica, 560pF, ±5%, 300V | 1002-0037 | Elmenco | DM15-F-561J |
| C70 | Mica, 680pF, ±5%, 500V | 1002-0022 | Elmenco | DM15-F-681-J |
| C71 | Mica, 2400pF, ±5%, 500V | 1002-0074 | Elmenco | DM19-F-242J |
| C72 | Mica, 3000pF, ±5%, 500V | 1002-0088 | Elmenco | DM19-F-302J |
| C73 | Mica, 3000pF, ±5%, 500V | 1002-0088 | Elmenco | DM19-F-302J |
| C74 | Tant, 10μF, +50-20%, 35V | 1011-0006 | ITT | TAG-10/35-20 |
| C75 | Tant, 10μF, +50-20%, 35V | 1011-0006 | ITT | TAG-10/35-20 |
| C76 | Mica, 120pF, ±5%, 500V | 1002-0010 | Elmenco | DM15-F-121J |
| C77 | Mica, 120pF, ±5%, 500V | 1002-0010 | Elmenco | DM15-F-121J |
| C78 | Mica, 120pF, ±5%, 500V | 1002-0010 | Elmenco | DM15-F-121J |
| C79 | Mica, 120pF, ±5%, 500V | 1002-0010 | Elmenco | DM15-F-121J |
| C80 | Mica, 10pF, ±5%, 500V | 1002-0016 | Elmenco | D15-C-100J |
| C81 | Mica, 56pF, ±5%, 500V | 1002-0019 | Elmenco | DM15-E-560J |
| C82 | Mica, 10pF, ±5%, 500V | 1002-0016 | Elmenco | D15-C-100J |
| C83 | Mica, 56pF, ±5%, 500V | 1002-0019 | Elmenco | DM15-E-560J |
| C84 | Tant, 10μF, +50-20%, 35V | 1011-0006 | ITT | TAG-10/35-20 |
| C85 | Mica, 300pF, ±5%, 500V | 1002-0059 | Elmenco | DM15-301J |
| C86 | Mica, 300pF, ±5%, 500V | 1002-0059 | Elmenco | DM15-301J |
| C87 | Mica, 1000pF, ±5%, 100V | 1002-0015 | Elmenco | DM15-F-102J |
| C88 | Cer, .002μF, ±20%, 500V | 1005-0003 | Erie | 831-596-25U-202M |
| C89 | Cer, .002μF, ±20%, 500V | 1005-0003 | Erie | 831-596-25U-202M |
| C90 | Mica, 1000pF, ±5%, 100V | 1002-0015 | Elmenco | DM15-F-102J |
| C91 | Cer, .002μF, ±20%, 500V | 1005-0003 | Erie | 831-596-25U-202M |
| C92 | Cer, .002μF, ±20%, 500V | 1005-0003 | Erie | 831-596-25U-202M |
| C93 | Cer, .002μF, ±20%, 500V | 1005-0003 | Erie | 831-596-25U-202M |
| C94 | Mica, 5pF, ±.5pF, 500V | 1002-0028 | Elmenco | DM15-C-050D |
| C95 | Mica, 5pF, ±.5pF, 500V | 1002-0028 | Elmenco | DM15-C-050D |
| C96 | Cer, .002μF, ±20%, 500V | 1005-0003 | Erie | 831-596-25U-202M |
| C97 | Mica, 1000pF, ±5%, 100V | 1002-0015 | Elmenco | DM15-F-102J |
| C98 | Mica, 5pF, ±.5pF, 500V | 1002-0028 | Elmenco | DM15-C-050D |
| C99 | Tant, 10μF, +50-20%, 35V | 1011-0006 | ITT | TAG-10/35-20 |
| C100 | Cer, .002μF, ±20%, 500V | 1005-0003 | Erie | 831-596-25U-202M |
| C101 | Cer, .002μF, ±20%, 500V | 1005-0003 | Erie | 831-596-25U-202M |
| C102 | Cer, .002μF, ±20%, 500V | 1005-0003 | Erie | 831-596-25U-202M |
| C103 | Cer, .002μF, ±20%, 500V | 1005-0003 | Erie | 831-596-25U-202M |
| C104 | Mica, 1000pF, ±5%, 100V | 1002-0015 | Elmenco | DM15-F-102J |
| C105 | Tant, 10μF, +50-20%, 35V | 1011-0006 | ITT | TAG-10/35-20 |

HIGH FREQUENCY PHASE LOCK LOOP, 3500 (cont.)

| CKT. REF. | DESCRIPTION | CE STOCK NO. | MFR. | MFR. NO. |
|---|---|---|---|---|
| C106 | Mica, 18pF, ±5%, 500V | 1002-0014 | Elmenco | DM15-C-180J |
| C107 | Mica, 12pF, ±5%, 100V | 1002-0017 | Elmenco | DM15-C-120J |
| C108 | Mica, 110pF, ±5%, 100V | 1002-0026 | Elmenco | DM15-F-111J |
| C109 | Mica, 36pF, ±5%, 500V | 1002-0041 | Elmenco | DM15-E-360J |
| C110 | Mica, 180pF, ±5%, 500V | 1002-0005 | Elmenco | DM15-F-181J |
| C111 | Mica, 96pF, ±1%, 500V | 1002-0049 | Elmenco | DM15-F-960F |
| C112 | Cer, .05μF, +80-20%, 25V | 1005-0014 | Erie | 5855-505-Y5U0-503Z |
| | DIODES | | | |
| CR1 | Si, Signal, 1N3064, 75 PIV | 1281-0013 | Teledyne | 1N3064 |
| CR2 | Diode, HP2800 | 1283-0001 | HPA | 5082-2800 |
| CR3 | Diode, HP2800 | 1283-0001 | HPA | 5082-2800 |
| CR4 | Diode, HP2800 | 1283-0001 | HPA | 5082-2800 |
| CR5 | Diode, HP2800 | 1283-0001 | HPA | 5082-2800 |
| CR6 | Si, Var, MV109, 29pF, 30V, .4W | 1281-0064 | Motorola | MV109 |
| CR7 | Si, Var, MV109, 29pF, 30V, .4W | 1281-0064 | Motorola | MV109 |
| CR8 | Si, Signal, 1N3064, 75 PIV | 1281-0013 | Teledyne | 1N3064 |
| CR9 | Si, Signal, 1N3064, 75 PIV | 1281-0013 | Teledyne | 1N3064 |
| CR10 | Si, Signal, 1N3064, 75 PIV | 1281-0013 | Teledyne | 1N3064 |
| CR11 | Si, Signal, 1N3064, 75 PIV | 1281-0013 | Teledyne | 1N3064 |
| CR12 | Si, Var, MV109, 29pF, 30V, .4W | 1281-0064 | Motorola | MV109 |
| CR13 | Si, Var, MV109, 29pF, 30V, .4W | 1281-0064 | Motorola | MV109 |
| CR14 | Si, Signal, 1N3064, 75 PIV | 1281-0013 | Teledyne | 1N3064 |
| CR15 | Si, Signal, 1N3064, 75 PIV | 1281-0013 | Teledyne | 1N3064 |
| CR16 | Si, Signal, 1N3064, 75 PIV | 1281-0013 | Teledyne | 1N3064 |
| CR17 | Si, Signal, 1N3064, 75 PIV | 1281-0013 | Teledyne | 1N3064 |
| CR18 | Si, Signal, 1N3064, 75 PIV | 1281-0013 | Teledyne | 1N3064 |
| CR19 | Si, Signal, 1N3064, 75 PIV | 1281-0013 | Teledyne | 1N3064 |
| CR20 | Si, Signal, 1N3064, 75 PIV | 1281-0013 | Teledyne | 1N3064 |
| CR21 | Si, Signal, 1N3064, 75 PIV | 1281-0013 | Teledyne | 1N3064 |
| CR22 | Diode, HP2800 | 1283-0001 | HPA | 5082-2800 |
| CR23 | Diode, HP2800 | 1283-0001 | HPA | 5082-2800 |
| CR24 | Diode, HP2800 | 1283-0001 | HPA | 5082-2800 |
| CR25 | Diode, HP2800 | 1283-0001 | HPA | 5082-2800 |
| | CONNECTORS | | | |
| J1 | SMB, 50 Ohm, Rtang, JK, PC, MT Snap-on | 2536-0060 | Cablewave | 700214NP |
| J2 | SMB, 50 Ohm, Rtang, JK, PC, MT Snap-on | 2536-0060 | Cablewave | 700214NP |
| J3 | SMB, 50Ω, JK, REC, BHD, MT | 2536-0082 | Sealectro | 51-049-0000 |
| J4 | SMB, 50 Ohm, Rtang, JK, PC, MT Snap-on | 2536-0060 | Cablewave | 700214NP |
| | INDUCTORS | | | |
| L1 | RF, Choke, 1000μH, ±5% | 1585-0020 | Delevan | 2500-28 |
| L2 | RF, Choke, 1000μH, ±5% | 1585-0020 | Delevan | 2500-28 |
| L3 | RF, Choke, 56μH, ±5% | 1585-0042 | Delevan | 1537-64 |
| L4 | Choke, 2 1/2 Turns, Wide Band | 1586-0003 | Ferroxcube | VK20020/4B |
| L5 | RF, Choke, 10μH, ±10% | 1585-0016 | Delevan | 1537-36 |
| L6 | RF, Choke, 10μH, ±10% | 1585-0016 | Delevan | 1537-36 |
| L7 | Choke, U-250, Ferrite Bead | 1586-0004 | Ferroxcube | 56-590-65/4B |
| L8 | RF, Choke, 56μH, ±5% | 1585-0042 | Delevan | 1537-64 |
| L9 | Coil, Var | 1596-8104 | Cushman | |
| L10 | Coil, Var | 1596-8103 | Cushman | |

HIGH FREQUENCY PHASE LOCK LOOP, 3500 (cont)

| CKT. REF. | DESCRIPTION | CE STOCK NO. | MFR. | MFR. NO. |
|---|---|---|---|---|
| L11 | RF, Choke, 10μH, ±10% | 1585-0016 | Delevan | 1537-36 |
| L12 | RF, Choke, 10μH, ±10% | 1585-0016 | Delevan | 1537-36 |
| L13 | RF, Choke, 1000μH, ±5% | 1585-0020 | Delevan | 2500-28 |
| L14 | Coil, Var | 1596-0214 | Cushman | |
| L15 | Coil, Var | 1596-0214 | Cushman | |
| L16 | Coil, Var | 1596-0214 | Cushman | |
| L17 | Coil, Var | 1596-8104 | Cushman | |
| L18 | RF, Choke, 10μH, ±10% | 1585-0016 | Delevan | 1537-36 |
| L19 | Coil, Var | 1596-8103 | Cushman | |
| L20 | RF, Choke, 10μH, ±10% | 1585-0016 | Delevan | 1537-36 |
| L21 | Choke, U-250, Ferrite Bead | 1586-0004 | Ferroxcube | 56-590-65/4B |
| L22 | RF, Choke, 56μH, ±5% | 1585-0042 | Delevan | 1537-64 |
| L23 | RF, Choke, .33μH, ±5% | 1585-0052 | Delevan | 1535-04 |
| L24 | RF, Choke, .22μH, ±20% | 1585-0039 | Delevan | 1537-02 |
| L25 | RF, Choke, .47μH, ±20% | 1585-0031 | Delevan | 1537-06 |
| L26 | Choke, 2 1/2 Turns, Wide Band | 1586-0003 | Ferroxcube | VK20020/4B |
| L27 | Choke, 2 1/2 Turns, Wide Band | 1586-0003 | Ferroxcube | VK20020/4B |
| L28 | Choke, 2 1/2 Turns, Wide Band | 1586-0003 | Ferroxcube | VK20020/4B |
| L29 | RF, Choke, 330 μH, ±10%, Mintr | 1585-0078 | Delevan | 1025-80 |
| | TRANSISTORS | | | |
| Q1 | Si, NPN, 2N3565 | 1272-0017 | Fairchild | 2N3565 |
| Q2 | Si, PNP, 2N4249 | 1272-0024 | Fairchild | 2N4249 |
| Q3 | Si, PNP, 2N4249 | 1272-0024 | Fairchild | 2N4249 |
| Q4 | Si, NPN, 2N3563 | 1272-0022 | Fairchild | 2N3563 |
| Q5 | Si, NPN, 2N3563 | 1272-0022 | Fairchild | 2N3563 |
| Q6 | Si, NPN, 2N4275 | 1272-0016 | Fairchild | 2N4275 |
| Q7 | Si, NPN, 2N4275 | 1272-0016 | Fairchild | 2N4275 |
| Q8 | Si, NPN, 2N3563 | 1272-0022 | Fairchild | 2 N3563 |
| Q9 | Si, NPN, 2N5179 | 1272-0067 | RCA | 2N5179 |
| Q10 | Si, NPN, 2N3563 | 1272-0022 | Fairchild | 2N3563 |
| Q11 | Si, NPN, 2N4275 | 1272-0016 | Fairchild | 2N4275 |
| Q12 | Si, NPN, 2N3563 | 1272-0022 | Fairchild | 2N3563 |
| Q13 | Si, NPN, 2N4275 | 1272-0016 | Fairchild | 2N4275 |
| Q14 | Si, NPN, 2N5179 | 1272-0067 | RCA | 2N5179 |
| Q15 | Si, NPN, 2N5179 | 1272-0067 | RCA | 2N5179 |
| Q16 | Si, NPN, 2N3563 | 1272-0022 | Fairchild | 2N3563 |
| Q17 | Si, NPN, 2N4275 | 1272-0016 | Fairchild | 2N4275 |
| Q18 | Si, NPN, 2N3565 | 1272-0017 | Fairchild | 2N3565 |
| Q19 | Si, NPN, 2N4275 | 1272-0016 | Fairchild | 2N4275 |
| Q20 | Si, NPN, 2N3565 | 1272-0017 | Fairchild | 2N3565 |
| Q21 | Si, NPN, 2N3565 | 1272-0017 | Fairchild | 2N3565 |
| Q22 | Si, NPN, 2N3565 | 1272-0017 | Fairchild | 2N3565 |
| Q23 | Si, NPN, 2N3565 | 1272-0017 | Fairchild | 2N3565 |
| Q24 | Si, NPN, 2N5179 | 1272-0067 | RCA | 2N5179 |
| Q25 | Si, NPN, 2N4275 | 1272-0016 | Fairchild | 2N4275 |
| Q26 | Si, NPN, 2N4275 | 1272-0016 | Fairchild | 2N4275 |
| Q27 | Si, NPN, 2N5179 | 1272-0067 | RCA | 2N5179 |
| Q28 | Si, NPN, 2N3563 | 1272-0022 | Fairchild | 2N3563 |
| Q29 | Si, NPN, 2N3563 | 1272-0022 | Fairchild | 2N3563 |
| Q30 | Si, NPN, 2N3565 | 1272-0017 | Fairchild | 2N3565 |
| Q31 | J-Fet, N-Channel, 2N4391 | 1272-0042 | Teledyne | 2N4391 |
| Q32 | J-Fet, N-Channel, 2N4391 | 1272-0042 | Teledyne | 2N4391 |
| Q33 | J-Fet, N-Channel, 2N4391 | 1272-0042 | Teledyne | 2N4391 |
| Q34 | Si, NPN, 2N3565 | 1272-0017 | Fairchild | 2N3565 |
| Q35 | Si, PNP, 2N4249 | 1272-0024 | Fairchild | 2N4249 |

HIGH FREQUENCY PHASE LOCK LOOP, 3500 (cont.)

| CKT. REF. | DESCRIPTION | CE STOCK NO. | MFR. | MFR. NO. |
|---|---|---|---|---|
| Q36 | Si, NPN, 2N3565 | 1272-0017 | Fairchild | 2N3565 |
| Q37 | Si, PNP, 2N4249 | 1272-0024 | Fairchild | 2N4249 |
| Q38 | Si, PNP, 2N4249 | 1272-0024 | Fairchild | 2N4249 |
| Q39 | Si, NPN, 2N3565 | 1272-0017 | Fairchild | 2N3565 |
| Q40 | Si, NPN, 2N5179 | 1272-0067 | RCA | 2N5179 |
| Q41 | Si, NPN, 2N3563 | 1272-0022 | Fairchild | 2N3563 |
| Q42 | Si, NPN, 2N3563 | 1272-0022 | Fairchild | 2N3563 |
| Q43 | Si, NPN, 2N3642 | 1272-0018 | Fairchild | 2N3642 |
| | RESISTORS | | | |
| R1 | Comp, 100 Ohm, ±5%, 1/4W | 1066-1015 | Allen-Bradley | CB1015 |
| R2 | Comp, 100 Ohm, ±5%, 1/4W | 1066-1015 | Allen-Bradley | CB1015 |
| R3 | Comp, 20K, ±5%, 1/4W | 1066-2035 | Allen-Bradley | CB2035 |
| R4 | Comp, 100, Ohm, ±5%, 1/4W | 1066-1015 | Allen-Bradley | CB1015 |
| R5 | Comp, 2K, ±5%, 1/4W | 1066-2025 | Allen-Bradley | CB2025 |
| R6 | Comp, 10K, ±5%, 1/4W | 1066-1035 | Allen-Bradley | CB1035 |
| R7 | Comp, 560 Ohm, ±5%, 1/4W | 1066-5615 | Allen-Bradley | CB5615 |
| R8 | Comp, 560 Ohm, ±5%, 1/4W | 1066-5615 | Allen-Bradley | CB5615 |
| R9 | Comp, 15K, ±5%, 1/4W | 1066-1535 | Allen-Bradley | CB1535 |
| R10 | Comp, 15K, ±5%, 1/4W | 1066-1535 | Allen-Bradley | CB1535 |
| R11 | Comp, 10K, ±5%, 1/4W | 1066-1035 | Allen-Bradley | CB1035 |
| R12 | Comp, 430Ω, ±5%, 1/4W | 1066-4315 | Allen-Bradley | CB4315 |
| R13 | Comp, 68K, ±5%, 1/4W | 1066-6835 | Allen-Bradley | CB6835 |
| R14 | Comp, 91K, ±5%, 1/4W | 1066-9135 | Allen-Bradley | CB9135 |
| R15 | Comp, 10K, ±5%, 1/4W | 1066-1035 | Allen-Bradley | CB1035 |
| R16 | Comp, 24K, ±5%, 1/4W | 1066-2435 | Allen-Bradley | CB2435 |
| R17 | Comp, 2K, ±5%, 1/4W | 1066-2025 | Allen-Bradley | CB2025 |
| R18 | Comp, 91K, ±5%, 1/4W | 1066-9135 | Allen-Bradley | CB9135 |
| R19 | Comp, 2K, ±5%, 1/4W | 1066-2025 | Allen-Bradley | CB2025 |
| R20 | Comp, 3K, ±5%, 1/4W | 1066-3025 | Allen-Bradley | CB3025 |
| R21 | Comp, 56 Ohm, ±5%, 1/4W | 1066-5605 | Allen-Bradley | CB5605 |
| R22 | Comp, 15K, ±5%, 1/4W | 1066-1535 | Allen-Bradley | CB1535 |
| R23 | Comp, 100 Ohm, ±5%, 1/4W | 1066-1015 | Allen-Bradley | CB1015 |
| R24 | Comp, 390 Ohm, ±5%, 1/4W | 1066-3915 | Allen-Bradley | CB3915 |
| R25 | Comp, 20K, ±5%, 1/4W | 1066-2035 | Allen-Bradley | CB2035 |
| R26 | Comp, 10K, ±5%, 1/4W | 1066-1035 | Allen-Bradley | CB1035 |
| R27 | Comp, 1K, ±5%, 1/4W | 1066-1025 | Allen-Bradley | CB1025 |
| R28 | Comp, 470 Ohm, ±5%, 1/4W | 1066-4715 | Allen-Bradley | CB4715 |
| R29 | Comp, 470 Ohm, ±5%, 1/4W | 1066-4715 | Allen-Bradley | CB4715 |
| R30 | Comp, 10K, ±5%, 1/4W | 1066-1035 | Allen-Bradley | CB1035 |
| R31 | Comp, 1K, ±5%, 1/4W | 1066-1025 | Allen-Bradley | CB1025 |
| R32 | Comp, 10 Ohm, ±5%, 1/4W | 1066-1005 | Allen-Bradley | CB1005 |
| R33 | Comp, 120 Ohm, ±5%, 1/4W | 1066-1215 | Allen-Bradley | CB1215 |
| R34 | Comp, 510Ω, ±5%, 1/4W | 1066-5115 | Allen-Bradley | CB5115 |
| R35 | Comp, 120 Ohm, ±5%, 1/4W | 1066-1215 | Allen-Bradley | CB1215 |
| R36 | Comp, 10 Ohm, ±5%, 1/4W | 1066-1005 | Allen-Bradley | CB1005 |
| R37 | Comp, 10 Ohm, ±5%, 1/4W | 1066-1005 | Allen-Bradley | CB1005 |
| R38 | Comp, 10K, ±5%, 1/4W | 1066-1035 | Allen-Bradley | CB1035 |
| R39 | Comp, 20K, ±5%, 1/4W | 1066-2035 | Allen-Bradley | CB2035 |
| R40 | Comp, 1K, ±5%, 1/4W | 1066-1025 | Allen-Bradley | CB1025 |
| R41 | Comp, 51 Ohm, ±5%, 1/4W | 1066-5105 | Allen-Bradley | CB5105 |
| R42 | Comp, 51 Ohm, ±5%, 1/4W | 1066-5105 | Allen-Bradley | CB5105 |
| R43 | Comp, 51 Ohm, ±5%, 1/4W | 1066-5105 | Allen-Bradley | CB5105 |
| R44 | Comp, 10 Ohm, ±5%, 1/4W | 1066-1005 | Allen-Bradley | CB1005 |
| R45 | Comp, 2.7K, ±5%, 1/4W | 1066-2725 | Allen-Bradley | CB2725 |

HIGH FREQUENCY PHASE LOCK LOOP, 3500 (cont )

| CKT. REF. | DESCRIPTION | CE STOCK NO. | MFR. | MFR. NO. |
|---|---|---|---|---|
| R46 | Comp, 5.1K, ±5%, 1/4W | 1066-5125 | Allen-Bradley | CB5125 |
| R47 | Comp, 2.2K, ±5%, 1/4W | 1066-2225 | Allen-Bradley | CB2225 |
| R48 | Comp, 2.2K, ±5%, 1/4W | 1066-2225 | Allen-Bradley | CB2225 |
| R49 | Comp, 100 Ohm, ±5%, 1/4W | 1066-1015 | Allen-Bradley | CB1015 |
| R50 | Comp, 27Ω, ±5%, 1/4W | 1066-2705 | Allen-Bradley | CB2705 |
| R51 | Comp, 100 Ohm, ±5%, 1/4W | 1066-1015 | Allen-Bradley | CB1015 |
| R52 | Comp, 27Ω, ±5%, 1/4W | 1066-2705 | Allen-Bradley | CB2705 |
| R53 | Comp, 100 Ohm, ±5%, 1/4W | 1066-1015 | Allen-Bradley | CB1015 |
| R54 | Comp, 390 Ohm, ±5%, 1/4W | 1066-3915 | Allen-Bradley | CB3915 |
| R55 | Comp, 4.7K, ±5%, 1/4W | 1066-4725 | Allen-Bradley | CB4725 |
| R56 | Comp, 510 Ohm, ±5%, 1/4W | 1066-5115 | Allen-Bradley | CB5115 |
| R57 | Comp, 390 Ohm, ±5%, 1/4W | 1066-3915 | Allen-Bradley | CB3915 |
| R58 | Comp, 4.7K, ±5%, 1/4W | 1066-4725 | Allen-Bradley | CB4725 |
| R59 | Comp, 1K, ±5%, 1/4W | 1066-1025 | Allen-Bradley | CB1025 |
| R60 | Comp, 15K, ±5%, 1/4W | 1066-1535 | Allen-Bradley | CB1535 |
| R61 | Comp, 15K, ±5%, 1/4W | 1066-1535 | Allen-Bradley | CB1535 |
| R62 | Comp, 1K, ±5%, 1/4W | 1066-1025 | Allen-Bradley | CB1025 |
| R63 | Comp, 1K, ±5%, 1/4W | 1066-1025 | Allen-Bradley | CB1025 |
| R64 | Comp, 10K, ±5%, 1/4W | 1066-1035 | Allen-Bradley | CB1035 |
| R65 | Comp, 100 Ohm, ±5%, 1/4W | 1066-1015 | Allen-Bradley | CB1015 |
| R66 | Comp, 100 Ohm, ±5%, 1/4W | 1066-1015 | Allen-Bradley | CB1015 |
| R67 | Comp, 10K, ±5%, 1/4W | 1066-1035 | Allen-Bradley | CB1035 |
| R68 | Comp, 270Ω, ±5%, 1/4W | 1066-2715 | Allen-Bradley | CB2715 |
| R69 | Comp, 39 Ohm, ±5%, 1/4W | 1066-3905 | Allen-Bradley | CB3905 |
| R70 | Comp, 680 Ohm, ±5%, 1/4W | 1066-6815 | Allen-Bradley | CB6815 |
| R71 | Comp, 100 Ohm, ±5%, 1/4W | 1066-1015 | Allen-Bradley | CB1015 |
| R72 | Comp, 100 Ohm, ±5%, 1/4W | 1066-1015 | Allen-Bradley | CB1015 |
| R73 | Comp, 270Ω, ±5%, 1/4W | 1066-2715 | Allen-Bradley | CB2715 |
| R74 | Comp, 680 Ohm, ±5%, 1/4W | 1066-6815 | Allen-Bradley | CB6815 |
| R75 | Comp, 39 Ohm, ±5%, 1/4W | 1066-3905 | Allen-Bradley | CB3905 |
| R76 | Comp, 22K, ±5%, 1/4W | 1066-2235 | Allen-Bradley | CB2235 |
| R77 | Comp, 22K, ±5%, 1/4W | 1066-2235 | Allen-Bradley | CB2235 |
| R78 | Comp, 4.7K, ±5%, 1/4W | 1066-4725 | Allen-Bradley | CB4725 |
| R79 | Comp, 7.5K, ±5%, 1/4W | 1066-7525 | Allen-Bradley | CB7525 |
| R80 | Comp, 1K, ±5%, 1/4W | 1066-1025 | Allen-Bradley | CB1025 |
| R81 | Comp, 4.7K, ±5%, 1/4W | 1066-4725 | Allen-Bradley | CB4725 |
| R82 | Comp, 1K, ±5%, 1/4W | 1066-1025 | Allen-Bradley | CB1025 |
| R83 | Comp, 5.1K, ±5%, 1/4W | 1066-5125 | Allen-Bradley | CB5125 |
| R84 | Comp, 7.5K, ±5%, 1/4W | 1066-7525 | Allen-Bradley | CB7525 |
| R85 | Comp, 1.5K, ±5%, 1/4W | 1066-1525 | Allen-Bradley | CB1525 |
| R86 | Comp, 1.5K, ±5%, 1/4W | 1066-1525 | Allen-Bradley | CB1525 |
| R87 | Comp, 240K, ±5%, 1/4W | 1066-2445 | Allen-Bradley | CB2445 |
| R88 | Comp, 130K, ±5%, 1/4W | 1066-1345 | Allen-Bradley | CB1345 |
| R89 | Comp, 15K, ±5%, 1/4W | 1066-1535 | Allen-Bradley | CB1535 |
| R90 | Comp, 30K, ±5%, 1/4W | 1066-3035 | Allen-Bradley | CB3035 |
| R91 | Comp, 910 Ohm, ±5%, 1/4W | 1066-9115 | Allen-Bradley | CB9115 |
| R92 | Comp, 2.4K, ±5%, 1/4W | 1066-2425 | Allen-Bradley | CB2445 |
| R93 | Comp, 16K, ±5%, 1/4W | 1066-1635 | Allen-Bradley | CB1635 |
| R94 | Comp, 12K, ±5%, 1/4W | 1066-1235 | Allen-Bradley | CB1235 |
| R95 | Comp, 100K, ±5%, 1/4W | 1066-1045 | Allen-Bradley | CB1045 |
| R96 | Comp, 100K, ±5%, 1/4W | 1066-1045 | Allen-Bradley | CB1045 |
| R97 | Comp, 100K, ±5%, 1/4W | 1066-1045 | Allen-Bradley | CB1045 |
| R98 | Comp, 10K, ±5%, 1/4W | 1066-1035 | Allen-Bradley | CB1035 |
| R99 | Comp, 15K, ±5%, 1/4W | 1066-1535 | Allen-Bradley | CB1535 |
| R100 | Comp, 15K, ±5%, 1/4W | 1066-1535 | Allen-Bradley | CB1535 |
| R101 | Comp, 1K, ±5%, 1/4W | 1066-1025 | Allen-Bradley | CB1025 |
| R102 | Comp, 100 Ohm, ±5%, 1/4W | 1066-1015 | Allen-Bradley | CB1015 |
| R103 | Comp, 10K, ±5%, 1/4W | 1066-1035 | Allen-Bradley | CB1035 |
| R104 | Comp, 100 Ohm, ±5%, 1/4W | 1066-1015 | Allen-Bradley | CB1015 |
| R105 | Comp, 22K, ±5%, 1/4W | 1066-2235 | Allen-Bradley | CB2235 |

HIGH FREQUENCY PHASE LOCK LOOP, 3500 (cont.)

| CKT. REF. | DESCRIPTION | CE STOCK NO. | MFR. | MFR. NO. |
|---|---|---|---|---|
| R106 | Comp, 22K, ±5%, 1/4W | 1066-2235 | Allen-Bradley | CB2235 |
| R107 | Comp, 30K, ±5%, 1/4W | 1066-3035 | Allen-Bradley | CB3035 |
| R108 | Comp, 30K, ±5%, 1/4W | 1066-3035 | Allen-Bradley | CB3035 |
| R109 | Comp, 30K, ±5%, 1/4W | 1066-3035 | Allen-Bradley | CB3035 |
| R110 | Comp, 1K, ±5%, 1/4W | 1066-1025 | Allen-Bradley | CB1025 |
| R111 | Comp, 5.1K, ±5%, 1/4W | 1066-5125 | Allen-Bradley | CB5125 |
| R112 | Comp, 1K, ±5%, 1/4W | 1066-1025 | Allen-Bradley | CB1025 |
| R113 | Comp, 10, Ohm, ±5%, 1/4W | 1066-1005 | Allen-Bradley | CB1005 |
| R114 | Comp, 390 Ohm, ±5%, 1/4W | 1066-3915 | Allen-Bradley | CB3915 |
| R115 | Comp, 15K, ±5%, 1/4W | 1066-1535 | Allen-Bradley | CB1535 |
| R116 | Comp, 10K, ±5%, 1/4W | 1066-1035 | Allen-Bradley | CB1035 |
| R117 | Comp, 5.1K, ±5%, 1/4W | 1066-5125 | Allen-Bradley | CB5125 |
| R118 | Comp, 4.7K, ±5%, 1/4W | 1066-4725 | Allen-Bradley | CB4725 |
| R119 | Comp, 5.1K, ±5%, 1/4W | 1066-5125 | Allen-Bradley | CB5125 |
| R120 | Comp, 1K, ±5%, 1/4W | 1066-1025 | Allen-Bradley | CB1025 |
| R121 | Comp, 15K, ±5%, 1/4W | 1066-1535 | Allen-Bradley | CB1535 |
| R122 | Comp, 4.7K, ±5%, 1/4W | 1066-4725 | Allen-Bradley | CB4725 |
| R123 | Comp, 510 Ohm, ±5%, 1/4W | 1066-5115 | Allen-Bradley | CB5115 |
| R124 | Comp, 100Ω, ±5%, 1/4W | 1066-1015 | Allen-Bradley | CB1015 |
| R125 | Comp, 27Ω, ±5%, 1/4W | 1066-2705 | Allen-Bradley | CB2705 |
| R126 | Comp, 390 Ohm, ±5%, 1/4W | 1066-3915 | Allen-Bradley | CB3915 |
| R127 | Comp, 100Ω, ±5%, 1/4W | 1066-1015 | Allen-Bradley | CB1015 |
| R128 | Comp, 27Ω, ±5%, 1/4W | 1066-2705 | Allen-Bradley | CB2705 |
| R129 | Comp, 2.2K, ±5%, 1/4W | 1066-2225 | Allen-Bradley | CB2225 |
| R130 | Comp, 2.2K, ±5%, 1/4W | 1066-2225 | Allen-Bradley | CB2225 |
| R131 | Comp, 39 Ohm, ±5%, 1/4W | 1066-3905 | Allen-Bradley | CB3905 |
| R132 | Comp, 27K, ±5%, 1/4W | 1066-2735 | Allen-Bradley | CB2735 |
| R133 | Comp, 27K, ±5%, 1/4W | 1066-2735 | Allen-Bradley | CB2735 |
| R134 | Comp, 30K, ±5%, 1/4W | 1066-3035 | Allen-Bradley | CB3035 |
| R135 | Comp, 30K, ±5%, 1/4W | 1066-3035 | Allen-Bradley | CB3035 |
| R136 | Comp, 30K, ±5%, 1/4W | 1066-3035 | Allen-Bradley | CB3035 |
| R137 | Comp, 30K, ±5%, 1/4W | 1066-3035 | Allen-Bradley | CB3035 |
| R138 | Comp, 30K, ±5%, 1/4W | 1066-3035 | Allen-Bradley | CB3035 |
| R139 | Comp, 30K, ±5%, 1/4W | 1066-3035 | Allen-Bradley | CB3035 |
| R140 | Comp, 51 Ohm, ±5%, 1/4W | 1066-5105 | Allen-Bradley | CB5105 |
| R141 | Comp, 51 Ohm, ±5%, 1/4W | 1066-5105 | Allen-Bradley | CB5105 |
| R142 | Comp, 51 Ohm, ±5%, 1/4W | 1066-5105 | Allen-Bradley | CB5105 |
| R143 | Comp, 1K, ±5%, 1/4W | 1066-1025 | Allen-Bradley | CB1025 |
| R144 | Comp, 10K, ±5%, 1/4W | 1066-1035 | Allen-Bradley | CB1035 |
| R145 | Comp, 100 Ohm, ±5%, 1/4W | 1066-1015 | Allen-Bradley | CB1015 |
| R146 | Comp, 20K, ±5%, 1/4W | 1066-2035 | Allen-Bradley | CB2035 |
| R147 | Comp, 10Ω, ±5%, 1/4W | 1066-1005 | Allen-Bradley | CB1005 |
| R148 | Comp, 10Ω, ±5%, 1/4W | 1066-1005 | Allen-Bradley | CB1005 |
| R149 | Comp, 120 Ohm, ±5%, 1/4W | 1066-1215 | Allen-Bradley | CB1215 |
| R150 | Comp, 10K, ±5%, 1/4W | 1066-1035 | Allen-Bradley | CB1035 |
| R151 | Comp, 39 Ohm, ±5%, 1/4W | 1066-3905 | Allen-Bradley | CB3905 |
| R152 | Comp, 1.8K, ±5%, 1/4W | 1066-1825 | Allen-Bradley | CB1825 |
| R153 | Comp, 510 Ohm, ±5%, 1/4W | 1066-5105 | Allen-Bradley | CB5105 |
| R154 | Comp, 180 Ohm, ±5%, 1/4W | 1066-1815 | Allen-Bradley | CB1815 |
| R155 | Comp, 680 Ohm, ±5%, 1/4W | 1066-6815 | Allen-Bradley | CB6815 |
| R156 | Comp, 10K, ±5%, 1/4W | 1066-1035 | Allen-Bradley | CB1035 |
| R157 | Comp, 10K, ±5%, 1/4W | 1066-1035 | Allen-Bradley | CB1035 |
| R158 | Comp, 1K, ±5%, 1/4W | 1066-1025 | Allen-Bradley | CB1025 |
| R159 | Comp, 100 Ohm, ±5%, 1/4W | 1066-1015 | Allen-Bradley | CB1015 |
| R160 | Comp, 4.3K, ±5%, 1/4W | 1066-4325 | Allen-Bradley | CB4325 |

HIGH FREQUENCY PHASE LOCK LOOP, 3500 (cont.)

| CKT. REF. | DESCRIPTION | CE STOCK NO. | MFR. | MFR. NO. |
|---|---|---|---|---|
| R161 | Comp, 10K, ±5%, 1/4W | 1066-1035 | Allen-Bradley | CB1035 |
| R162 | Comp, 1K, ±5%, 1/4W | 1066-1025 | Allen-Bradley | CB1025 |
| | TRANSFORMERS | | | |
| T1 | Toriod-Trifilar, 8T | 1579-0017 | Cushman | |
| T2 | Toriod-Trifilar, 8T | 1579-0017 | Cushman | |
| T3 | Toriod-Trifilar, 8T | 1579-0017 | Cushman | |
| T4 | Toriod-Trifilar, 8T | 1579-0017 | Cushman | |
| T5 | Toriod-Trifilar, 8T | 1579-0017 | Cushman | |
| T6 | Toriod-Trifilar, 8T | 1579-0017 | Cushman | |
| | INTEGRATED CIRCUITS | | | |
| U1 | IC, LM 301A, Opnl Ampl | 2025-0032 | Fairchild | LM301A |
| U2 | IC, MC4044P, Phase Detector | 2025-0066 | Motorola | MC4044P |
| U3 | IC, MC7805P, 5, Volt, Pos, Rgltr | 2025-0088 | Motorola | MC7805CP |
| U4 | IC, MC4044P, Phase Detector | 2025-0066 | Motorola | MC4044P |
| U5 | IC, LM 301A, Opnl Ampl | 2025-0032 | Fairchild | LM301A |

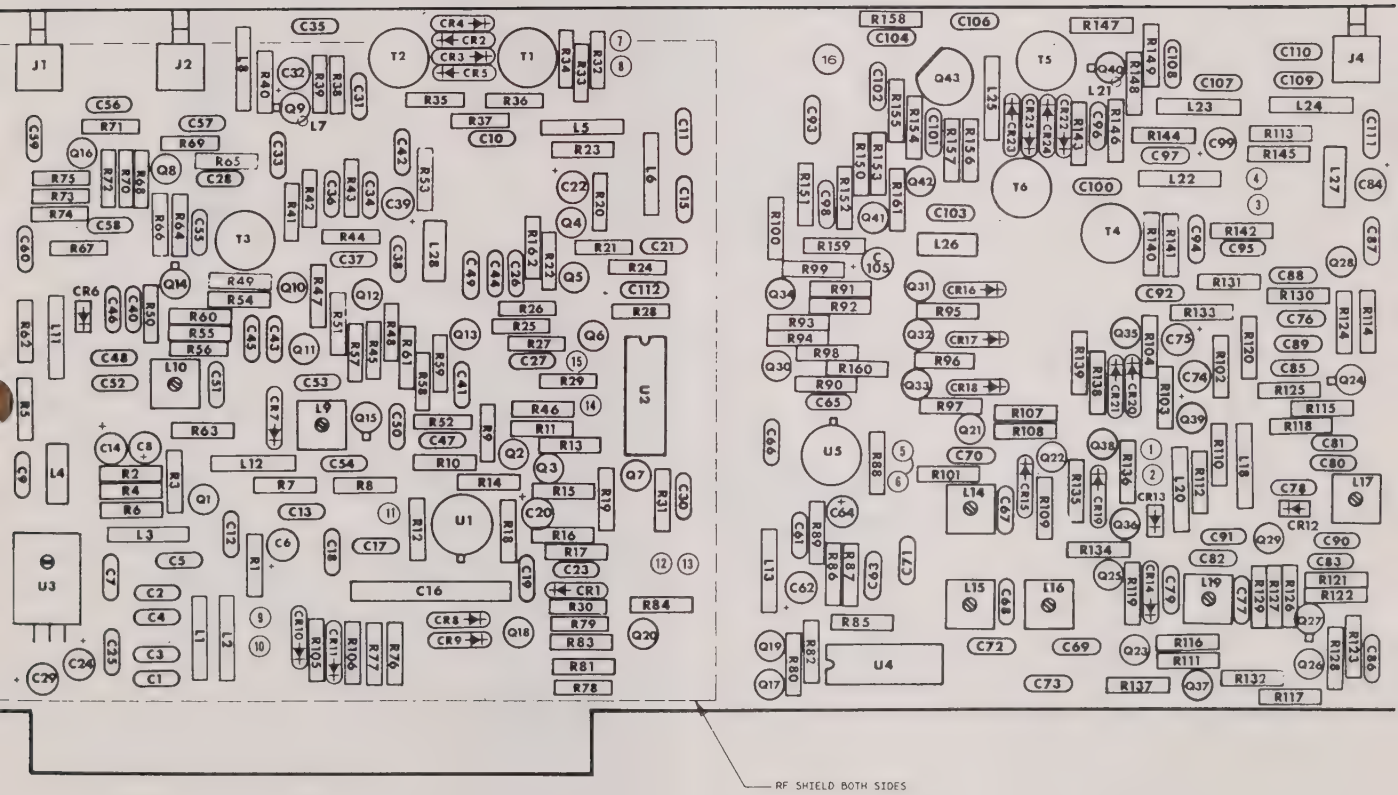
RF SHIELD BOTH SIDES

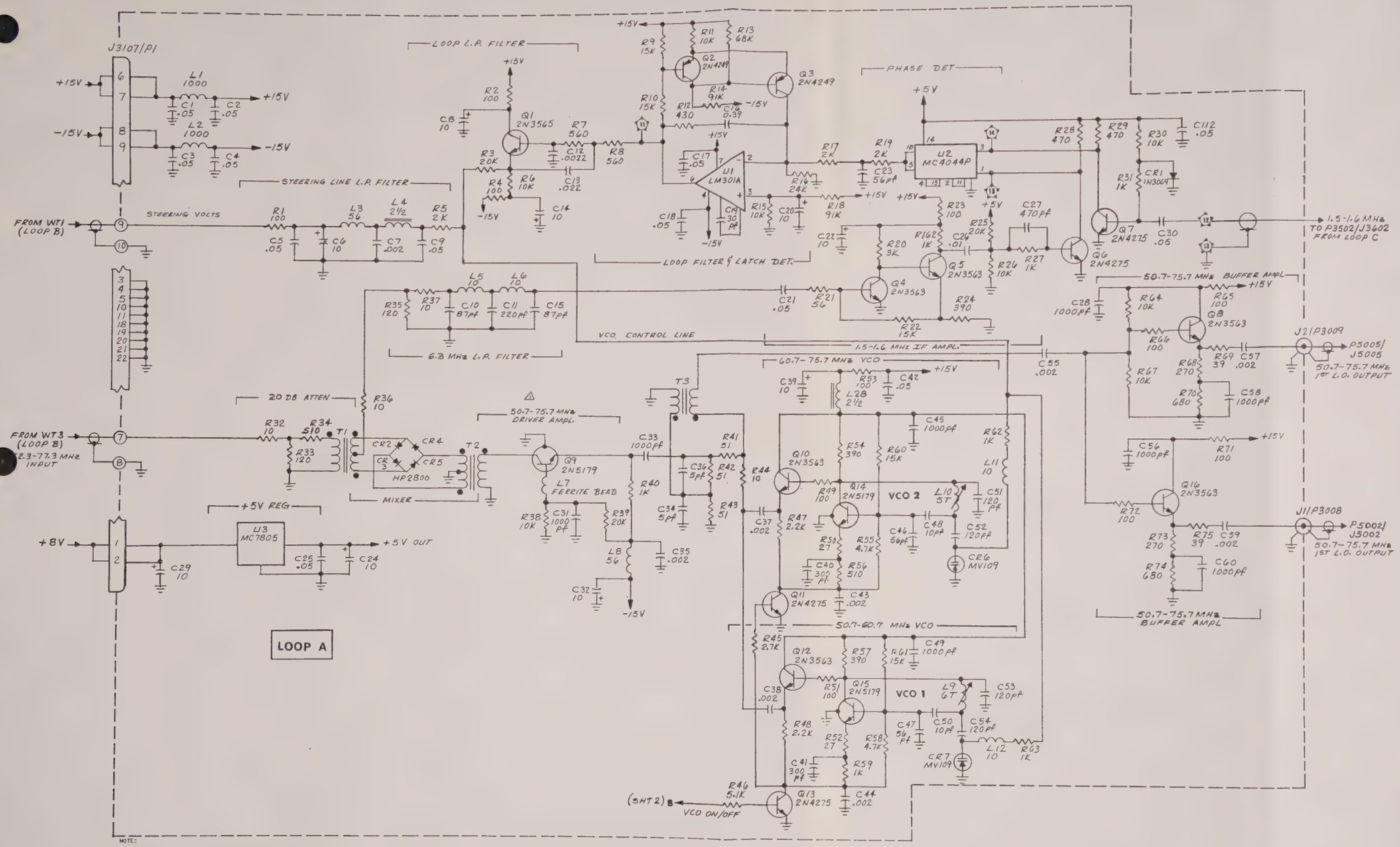


NOTE:
1. RESISTORS - 1/4W, 5% VALUES IN OHMS UNLESS OTHERWISE NOTED.
2. CAPACITORS - VALUES IN μF UNLESS OTHERWISE NOTED.
3. INDUCTORS - VALUES IN μH UNLESS OTHERWISE NOTED.
4. *FACTORY SELECT. TYPICAL VALUE SHOWN.
5. ALL VOLTAGES ARE DC UNLESS OTHERWISE NOTED.

5601**0063**3

Figure 23. High Frequency Phase Lock Loop, 3500, sheet 1.

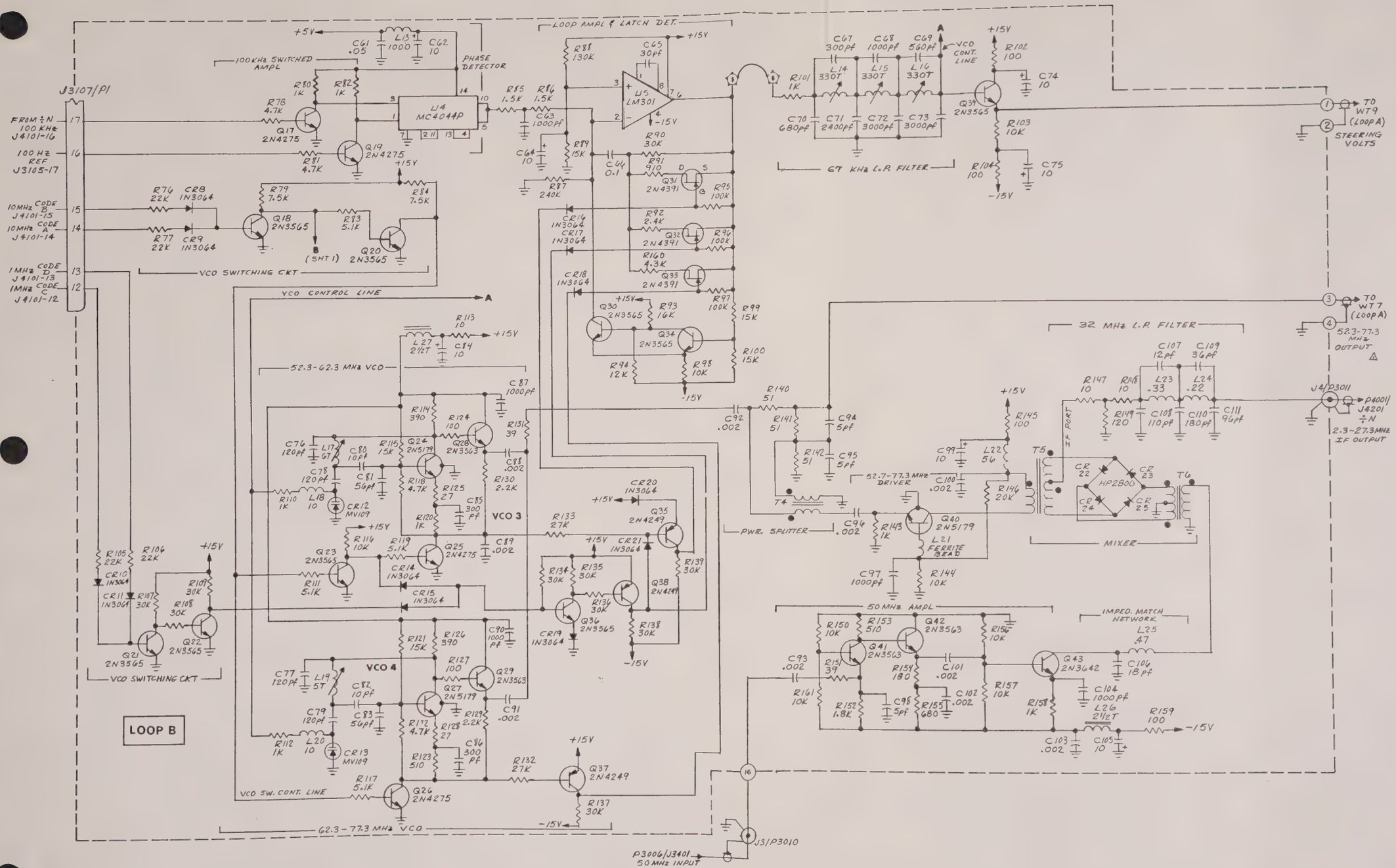


5601-0063-3

Figure 24. High Frequency Phase Lock Loop, 3500, sheet 2.

## LOW FREQUENCY PHASE LOCK LOOP, 3600

| CKT. REF. | DESCRIPTION | CE STOCK NO. | MFR. | MFR. NO. |
|---|---|---|---|---|
| 3600 | Low Frequency PLL, PCB Assy | 7001-0292 | Cushman | |
| | P.C. Board | 1780-0543 | Cushman | |
| | CAPACITORS | | | |
| C1 | Elect, 47μF, ±20%, 35V | 1013-0045 | Nichicon | 35UKB-47-M |
| C2 | Elect, 47μF, ±20%, 35V | 1013-0045 | Nichicon | 35UKB-47-M |
| C3 | Cer, .05μF, +80-20%, 25V | 1005-0014 | Erie | 5855-505-Y5U0-503Z |
| C4 | Tant, 10μF, +50-20%, 35V | 1011-0006 | ITT | Tag-10/35-20 |
| C5 | Tant, 10μF, +50-20%, 35V | 1011-0006 | ITT | Tag-10/35-20 |
| C6 | Tant, 10μF, +50-20%, 35V | 1011-0006 | ITT | Tag-10/35-20 |
| C7 | Tant, 47μF, ±20%, 20V | 1011-0009 | Dickson | D47GSC20M |
| C8 | Mica, 27pF, ±5%, 500V | 1002-0008 | Elmenco | DM15-E-270J |
| C9 | Mica, 390pF, ±5%, 500V | 1002-0033 | Elmenco | DM15-F-391J |
| C10 | Mica, 1000pF, ±5%, 500V | 1002-0015 | Elmenco | DM15-F-102J |
| C11 | Mica, 18pF, ±5%, 500V | 1002-0014 | Elmenco | DM15-C-180J |
| C12 | Cer, .01μF, +80-20%, 25V | 1005-0013 | Elmenco | DM15-E-680J |
| C13 | Elect, 47μF, ±20%, 35V | 1013-0045 | Nichicon | 35UKB-47-M |
| C14 | Cer, .01μF, +80-20%, 25V | 1005-0013 | Elmenco | DM15-E-680J |
| C15 | Cer, .1μF, ±10%, 100V | 1005-0064 | Aerovox | CK06BX104K |
| C16 | Cer, .05μF, +80-20%, 25V | 1005-0014 | Erie | 5855-505-Y5U0-503Z |
| C17 | Elect, 47μF, ±20%, 35V | 1013-0045 | Nichicon | 35UKB-47-M |
| C18 | Elect, 47μF, ±20%, 35V | 1013-0045 | Nichicon | 35UKB-47-M |
| C19 | Tant, 10μF, +50-20%, 35V | 1011-0006 | ITT | Tag-10/35-20 |
| C20 | Mica, 300pF, ±5%, 500V | 1002-0059 | Elmenco | DM15-301J |
| C21 | Mica, 430pF, ±5%, 500V | 1002-0034 | Elmenco | DM15-F-431J |
| C22 | Mica, 300pF, ±5%, 500V | 1002-0059 | Elmenco | DM15-301J |
| C23 | Cer, .1μF, ±10%, 100V | 1005-0064 | Aerovox | CK06BX104K |
| C24 | Cer, .05μF, +80-20%, 25 V | 1005-0014 | Erie | 5855-505-Y5U0-503Z |
| C25 | Cer, .05μF, +80-20%, 25V | 1005-0014 | Erie | 5855-505-Y5U0-503Z |
| C26 | Tant, 10μF, +50-20%, 35V | 1011-0006 | ITT | Tag-10/35-20 |
| C27 | Cer, .01μF, +80-20%, 25V | 1005-0013 | Erie | 5835-512-Y5U-103Z |
| C28 | Mica, 200pF, ±5%, 500V | 1002-0042 | Elmenco | DM15-F-201J |
| C29 | Mica, 620pF, ±5%, 300V | 1002-0038 | Elmenco | DM15-F-621J |
| C30 | Mica, 82pF, ±5%, 500V | 1002-0020 | Elmenco | DM15-E-820J |
| C31 | Mica, 680pF, ±5%, 500V | 1002-0022 | Elmenco | DM15-F-681J |
| C32 | Mica, 470pF, ±5%, 500V | 1002-0035 | Elmenco | DM15-F-471J |
| C33 | Tant, 2.2μF, ±10%, 35V | 1011-0001 | Dickson | D2R2GSB35K |
| C34 | Cer, .01μF, +80-20%, 25V | 1005-0013 | Erie | 5835-512-Y5U-103Z |
| C35 | Mica, 100pF, ±5%, 500V | 1002-0011 | Elmenco | DM15-F-101J |
| C36 | Tant, 10μF, +50-20%, 35V | 1011-0006 | ITT | Tag-10/35-20 |
| C37 | Cer, .1μF, ±10%, 100V | 1005-0064 | Aerovok | CK06BX104K |
| C38 | Mica, 270pF, ±5%, 500V | 1002-0031 | Elmenco | DM15-F-271J |
| C39 | Elect, 47μF, ±20%, 35V | 1013-0045 | Nichicon | 35UKB-47-M |
| C40 | Mica, 1000pF, ±5%, 500V | 1002-0015 | Elmenco | DM15-F-1025 |
| C41 | Mica, 43pF, ±5%, 500V | 1002-0046 | Elmenco | DM15-E-430J |
| C42 | Mica, 150pF, ±5%, 500V | 1002-0021 | 1002-0021 | DM15-F-151J |
| C43 | Cer, .05μF, +80-20%, 25V | 1005-0014 | Erie | 5855-505-Y5U0-503Z |
| C44 | Cer, .05μF, +80-20%, 25V | 1005-0014 | Erie | 5855-505-Y5U0-503Z |
| C45 | Cer, .05μF, +80-20%, 25V | 1005-0014 | Erie | 5855-505-Y5U0-503Z |
| C46 | Cer, .002μF, +80-20%, 25V | 1005-0003 | Erie | 831-596-Z5U-202M |
| C47 | Cer, .05μF, +80-20%, 25V | 1005-0014 | Erie | 5855-505-Y5U0-503Z |
| C48 | Cer, .05μF, +80-20%, 25V | 1005-0014 | Erie | 5855-505-Y5U0-503Z |
| C49 | Cer, .05μF, +80-20%, 25V | 1005-0014 | Erie | 5855-505-Y5U0-503Z |
| C50 | Cer, .05μF, +80-20%, 25V | 1005-0014 | Erie | 5855-505-Y5U0-503Z |

LOW FREQUENCY PHASE LOCK LOOP, 3600 (cont.)

| CKT. REF. | DESCRIPTION | CE STOCK NO. | MFR. | MFR. NO. |
|---|---|---|---|---|
| C51 | Cer, .05μF, +80-20%, 25V | 1005-0014 | Erie | 5855-505-Y5U0-503Z |
| C52 | Cer, .05μF, +80-20%, 25V | 1005-0014 | Erie | 5855-505-Y5U0-503Z |
| C53 | Cer, .01μF, ±10%, 100V | 1005-0065 | Aerovox | CK06BX103K |
| C54 | Cer, .1μF, ±10%, 100V | 1005-0064 | Aerovox | CK06BX104K |
| C55 | Tant, 10μF, +50-20%, 35V | 1002-0006 | ITT | Tag-10/35-20 |
| C56 | Cer, .1μF, ±10%, 100V | 1005-0064 | Aerovox | CK06BX104K |
| C57 | Tant, 10μF, +50-20%, 20V | 1011-0006 | ITT | TAG-10/35-20 |
| C58 | Cer, .01μF, ±10%, 100V | 1005-0065 | Aerovox | CK06BX103K |
| C59 | Cer, .05μF, +80-20%, 25V | 1005-0014 | Erie | 5855-505-Y5U0-503Z |
| C60 | Mica, 100pF, ±5%, 500V | 1002-0011 | Elmenco | DM15-F-101J |
| C61 | Poly, .0027μF, ±10%, 100V | 1008-0009 | Elmenco | P92721/1 |
| C62 | Poly, .0027μF, ±10%, 100V | 1008-0009 | Elmenco | P92721/1 |
| C63 | Poly, .0056NF, ±10%, 100V | 1008-0022 | Sprague | 225P22291WA3 |
| C64 | Poly, .39μF, ±10%, 200V | 1008-0037 | Electrocube | 625B1C394K2 |
| C65 | Cer, .05μF, +80-20%, 25V | 1005-0014 | Erie | 5855-505-Y5U0-503Z |
| C66 | Mica, 100pF, ±5%, 500V | 1002-0011 | Elmenco | DM15-F-101J |
| C67 | Cer, .05μF, +80-20%, 25V | 1005-0014 | Erie | 5855-505-Y5U0-503Z |
| C68 | Tant, 10μF, +50-20%, 20V | 1011-0006 | ITT | Tag-10/35-20 |
| C69 | Poly, .039μF, ±10%, 100V | 1008-0045 | Sprague | 225P39391WA3 |
| C70 | Cer, .05μF, +80-20%, 25V | 1005-0014 | Erie | 5855-505-Y5U0-503Z |
| C71 | Tant, 10μF, +50-20%, 20V | 1011-0006 | ITT | Tag-10/35-20 |
| C72 | Mica, 120pF, ±5%, 500V | 1002-0010 | Elmenco | DM15-F-121J |
| C73 | Tant, 10μF, +50-20%, 20V | 1011-0006 | ITT | Tag-10/35-20 |
| C74 | Mica, 1000pF, ±5%, 500V | 1002-0015 | Elmenco | DM15-F-102J |
| C75 | Mica, 27pF, ±5%, 500V | 1002-0008 | Elmenco | DM15-E-270J |
| C76 | Mica, 270pF, ±5%, 500V | 1002-0031 | Elmenco | DM15-F-271J |
| C77 | Cer, .05μF, +80-20%, 25V | 1005-0014 | Erie | 5855-505-Y5U0-503Z |
| C78 | Cer, .05μF, +80-20%, 25V | 1005-0014 | Erie | 5855-505-Y5U0-503Z |
| C79 | Cer, .05μF, +80-20%, 25V | 1005-0014 | Erie | 5855-505-Y5U0-503Z |
| C80 | Cer, .01μF, +80-20%, 25V | 1005-0013 | Elmenco | DM15-E-680J |
| C81 | Cer, .05μF, +80-20%, 25V | 1005-0014 | Erie | 5855-505-Y5U0-503Z |
| C82 | Cer, .01μF, +80-20%, 25V | 1005-0013 | Elmenco | DM15-E-680J |
| C83 | Cer, .05μF, +80-20%, 25V | 1005-0014 | Erie | 5855-505-Y5U0-503Z |
| C84 | Cer, .05μF, +80-20%, 25V | 1005-0014 | Erie | 5855-505-Y5U0-503Z |
| C85 | Cer, .01μF, +80-20%, 25V | 1005-0013 | Elmenco | DM15-E-680J |
| C86 | Cer, .05μF, +80-20%, 25V | 1005-0014 | Erie | 5855-505-Y5U0-503Z |
| C87 | Cer, .01μF, +80-20%, 25V | 1005-0013 | Elmenco | DM15-E-680J |
| C88 | Cer, .05μF, +80-20%, 25V | 1005-0014 | Erie | 5855-505-Y5U0-503Z |
| C89 | Cer, .05μF, +80-20%, 25V | 1005-0014 | Erie | 5855-505-Y5U0-503Z |
| C90 | Mica, 560pF, ±5%, 300V | 1002-0037 | Elmenco | DM15-F-561J |
| C91 | Mica, 1100pF, ±5%, 500V | 1002-0071 | Elmenco | DM19-F-112J |
| C92 | Mica, 1000pF, ±5%, 500V | 1002-0015 | Elmenco | DM15-F-102J |
| C93 | Tant, 47μF, ±20%, 35V | 1011-0009 | Dickson | D47GSC20M |
| C94 | Tant, 10μF, +50-20%, 35V | 1011-0006 | ITT | Tag-10/35-20 |
| C95 | Cer, .01μF, +80-20%, 25V | 1005-0013 | Elmenco | DM15-E-680J |
| C96 | Cer, .05μF, +80-20%, 25V | 1005-0014 | Erie | 5855-505-Y5U0-503Z |
| C97 | Cer, .05μF, +80-20%, 25V | 1005-0014 | Erie | 5855-505-Y5U0-503Z |
| C98 | Cer, .05μF, +80-20%, 25V | 1005-0014 | Erie | 5855-505-Y5U0-503Z |
| C99 | Cer, .1μF, ±10%, 100V | 1005-0064 | Aerovox | CK06BX104K |
| C100 | Cer, .05μF, +80-20%, 25V | 1005-0014 | Erie | 5855-505-Y5U0-503Z |
| C101 | Tant, 10μF, +50-20%, 35V | 1011-0006 | ITT | Tag-10/35-20 |
| C102 | Cer, .01μF, ±10%, 100V | 1005-0065 | Aerovox | CK06BX103K |
| C103 | Cer, .1μF, +10%, 100V | 1005-0064 | Aerovox | CK06BX104K |
| C104 | Cer, .1μF, +10%, 100V | 1005-0064 | Aerovox | CK06BX104K |
| C105 | Cer, .01μF, ±10%, 100V | 1005-0065 | Aerovox | CK06BX103K |

LOW FREQUENCY PHASE LOCK LOOP, 3600 (cont.)

| CKT. REF. | DESCRIPTION | CE STOCK NO. | MFR. | MFR. NO. |
|---|---|---|---|---|
| C106 | Tant, 10μF, +50-20%, 35V | 1011-0006 | ITT | Tag-10/35-20 |
| C107 | Cer, .01μF, ±10%, 100V | 1005-0065 | Aerovox | CK06BX103K |
| C108 | Cer, .01μF, +10%, 100V | 1005-0065 | Aerovox | CK06BX103K |
| C109 | Cer, .01μF, +10%, 100V | 1005-0065 | Aerovox | CK06BX103K |
| C110 | Cer, .01μF, +10%, 100V | 1005-0065 | Aerovox | CK06BX103K |
| C111 | Elect, 47μF, ±20%, 20V | 1011-0009 | Dickson | D47GSC20M |
| C112 | Cer, .05μF, +80-20%, 25V | 1005-0014 | Erie | 5855-505-Y5U0-503Z |
| C113 | Mica, 100pF, ±5%, 500V | 1002-0011 | Elmenco | DM15-F-101J |
| C114 | Cer, .05μF, +80-20%, 25V | 1005-0014 | Erie | 5855-505-Y5U0-503Z |
| C115 | Tant, 10μF, +50-20%, 35V | 1011-0006 | ITT | Tag-10/35-20 |
| C116 | Poly, .39μF, ±10%, 200V | 1008-0037 | Electrocube | 625B1C394K2 |
| C117 | Mica, 270pF, ±5%, 500V | 1002-0031 | Elmenco | DM15-F-271J |
| | DIODES | | | |
| CR1 | Si, Var, MV109, 29pF, 30V | 1281-0064 | Motorola | MV109 |
| CR2 | Si, Var, MV109, 29pF, 30V | 1281-0064 | Motorola | MV109 |
| CR3 | Si, Signal, 1N3064, 75 PIV | 1281-0013 | Teledyne | 1N3064 |
| CR4 | G633 | 1282-0005 | ITT | G633 |
| CR5 | G633 | 1282-0005 | ITT | G633 |
| CR6 | G633 | 1282-0005 | ITT | G633 |
| CR7 | G633 | 1282-0005 | ITT | G633 |
| CR8 | Si, Var, MV109, 29pF, 30V | 1281-0064 | Motorola | MV109 |
| CR9 | Si, Var, MV109, 29pF, 30V | 1281-0064 | Motorola | MV109 |
| CR10 | Not used | | | |
| CR11 | Si, Var, MV109, 29pF, 30V | 1281-0064 | Motorola | MV109 |
| CR12 | Si, Signal, 1N3064, 75 PIV | 1281-0013 | Teledyne | 1N3064 |
| CR13 | Si, Signal, 1N3064, 75 PIV | 1281-0013 | Teledyne | 1N3064 |
| CR14 | Si, Signal, 1N3064, 75 PIV | 1281-0013 | Teledyne | 1N3064 |
| CR15 | Si, Signal, 1N3064, 75 PIV | 1281-0013 | Teledyne | 1N3064 |
| CR16 | Si, Signal, 1N3064, 75 PIV | 1281-0013 | Teledyne | 1N3064 |
| | CONNECTOR | | | |
| J1 | Conn, SMB, 50 Ohm, Rtang, JK, PC, MT | 2536-0060 | Sterling | 700214NP |
| | INDUCTORS | | | |
| L1 | RF, Choke, 1000μH, ±5% | 1585-0020 | Delevan | 2500-28 |
| L2 | RF, Choke, 1000μF, ±5% | 1585-0020 | Delevan | 2500-28 |
| L3 | RF, Choke, 1000μF, ±5% | 1585-0020 | Delevan | 2500-28 |
| L4 | RF, Choke, 1000μF, ±5% | 1585-0020 | Delevan | 2500-28 |
| L5 | RF, Choke, 1000μF, ±5% | 1585-0020 | Delevan | 2500-28 |
| L6 | RF, Choke, 1000μF, ±5% | 1585-0020 | Delevan | 2500-28 |
| L7 | Coil, Var | 1596-0219 | Cushman | |
| L8 | RF, Choke, 47MH, ±10% | 1585-0044 | Cambion | 3635-57 |
| L9 | RF, Choke, 4700μH, ±5% | 1585-0006 | Delevan | 2500-67 |
| L10 | RF, Choke, 4700μH, ±5% | 1585-0006 | Delevan | 2500-67 |
| L11 | RF, Choke, 1.2μH, ±10% | 1585-0066 | Delevan | 1537-14 |
| L12 | RF, Choke, 1.5μH, ±10% | 1585-0038 | Delevan | 1537-16 |
| L13 | Coil, Var | 1596-0216 | Cushman | |
| L14 | RF, Choke, 1000μH, ±5% | 1585-0020 | Delevan | 2500-28 |
| L15 | Coil, 2.4μH, ±5% | 1596-0056 | Dale | IDH1041-33 |
| L16 | RF, Choke, 56μH, ±5% | 1585-0042 | Delevan | 1537-64 |
| L17 | RF, 220μH, ±5% | 1585-0018 | Delevan | 1537-92 |
| L18 | RF, Choke, 3.3μH, ±10% | 1585-0037 | Delevan | 1537-24 |
| L19 | RF, Choke, 2.7μH, ±10% | 1585-0049 | Delevan | 1537-22 |
| L20 | RF, 220μH, ±5% | 1585-0018 | Delevan | 1537-92 |
| L21 | RF, Choke, 680μH, ±5% | 1585-0023 | Delevan | 2500-20 |

LOW FREQUENCY PHASE LOCK LOOP, 3600 (cont.)

| CKT. REF. | DESCRIPTION | CE STOCK NO. | MFR. | MFR. NO. |
|---|---|---|---|---|
| | TRANSISTORS | | | |
| Q1 | Si, Signal, NPN, 2N3563 | 1272-0022 | Fairchild | 2N3563 |
| Q2 | Si, Signal, NPN, 2N3563 | 1272-0022 | Fairchild | 2N3563 |
| Q3 | J-FET, N-Channel, 2N4416 | 1272-0048 | National | KE4416 |
| Q4 | Si, Signal, NPN, 2N3565 | 1272-0017 | Fairchild | 2N3565 |
| Q5 | Si, Signal, NPN, 2N3565 | 1272-0017 | Fairchild | 2N3565 |
| Q6 | Si, Signal, NPN, 2N3565 | 1272-0017 | Fairchild | 2N3565 |
| Q7 | Si, Signal, NPN, 2N3565 | 1272-0017 | Fairchild | 2N3565 |
| Q8 | Si, Signal, NPN, 2N3565 | 1272-0017 | Fairchild | 2N3565 |
| Q9 | Si, Signal, NPN, 2N3565 | 1272-0017 | Fairchild | 2N3565 |
| Q10 | Si, Signal, NPN, 2N5179 | 1272-0067 | RCA | 2N5179 |
| Q11 | Si, Signal, NPN, 2N3563 | 1272-0022 | Fairchild | 2N3563 |
| Q12 | Si, Signal, NPN, 2N3563 | 1272-0022 | Fairchild | 2N3563 |
| Q13 | Si, Signal, NPN, 2N3563 | 1272-0022 | Fairchild | 2N3563 |
| Q14 | Si, Signal, NPN, 2N3565 | 1272-0017 | Fairchild | 2N3565 |
| Q15 | Si, Signal, NPN, 2N3565 | 1272-0017 | Fairchild | 2N3565 |
| Q16 | Si, Signal, NPN, 2N5962 | 1272-0059 | Fairchild | 2N5962 |
| Q17 | Si, Signal, NPN, 2N4275 | 1272-0016 | Fairchild | 2N4275 |
| Q18 | Si, Signal, NPN, 2N4275 | 1272-0016 | Fairchild | 2N4275 |
| Q19 | Si, Signal, NPN, 2N4275 | 1272-0016 | Fairchild | 2N4275 |
| Q20 | Si, Signal, NPN, 2N4275 | 1272-0016 | Fairchild | 2N4275 |
| Q21 | Si, Signal, NPN, 2N5179 | 1272-0067 | RCA | 2N5179 |
| Q22 | Si, Signal, NPN, 2N3565 | 1272-0017 | Fairchild | 2N3565 |
| Q23 | Si, Signal, NPN, 2N3563 | 1272-0022 | Fairchild | 2N3563 |
| Q24 | Si, Signal, NPN, 2N3565 | 1272-0017 | Fairchild | 2N3565 |
| Q25 | Si, Signal, NPN, 2N3565 | 1272-0017 | Fairchild | 2N3565 |
| Q26 | Si, Signal, NPN, 2N4275 | 1272-0016 | Fairchild | 2N4275 |
| Q27 | Si, Signal, NPN, 2N3565 | 1272-0017 | Fairchild | 2N3565 |
| Q28 | Si, Signal, NPN, 2N3565 | 1272-0017 | Fairchild | 2N3565 |
| Q29 | Si, Signal, NPN, 2N3563 | 1272-0022 | Fairchild | 2N3563 |
| Q30 | Si, Signal, NPN, 2N3565 | 1272-0017 | Fairchild | 2N3565 |
| Q31 | Si, Signal, NPN, 2N3565 | 1272-0017 | Fairchild | 2N3565 |
| Q32 | Si, Signal, NPN, 2N4275 | 1272-0016 | Fairchild | 2N4275 |
| Q33 | Si, Signal, NPN, 2N4275 | 1272-0016 | Fairchild | 2N4275 |
| Q34 | Si, Signal, NPN, 2N3565 | 1272-0017 | Fairchild | 2N3565 |
| | RESISTORS | | | |
| R1 | Comp, 1K, ±5%, 1/4W | 1066-1025 | Allen-Bradley | CB1025 |
| R2 | Comp, 3.3K, ±5%, 1/4W | 1066-3325 | Allen-Bradley | CB3325 |
| R3 | Comp, 33K, ±5%, 1/4W | 1066-3335 | Allen-Bradley | CB3335 |
| R4 | Comp, 330K, ±5%, 1/4W | 1066-3345 | Allen-Bradley | CB3345 |
| R5 | Comp, 330K, ±5%, 1/4W | 1066-3345 | Allen-Bradley | CB3345 |
| R6 | Comp, 5.6M, ±5%, 1/4W | 1066-5655 | Allen-Bradley | CB5655 |
| R7 | Comp, 5.6M, ±5%, 1/4W | 1066-5655 | Allen-Bradley | CB5655 |
| R8 | Comp, 100Ω, ±5%, 1/4W | 1066-1015 | Allen-Bradley | CB1015 |
| R9 | Comp, 220Ω, ±5%, 1/4W | 1066-2215 | Allen-Bradley | CB2215 |
| R10 | Comp, 5.1K, ±5%, 1/4W | 1066-5125 | Allen-Bradley | CB5125 |
| R11 | Comp, 10K, ±5%, 1/4W | 1066-1035 | Allen-Bradley | CB1035 |
| R12 | Comp, 10K, ±5%, 1/4W | 1066-1035 | Allen-Bradley | CB1035 |
| R13 | Comp, 2.2K, ±5%, 1/4W | 1066-2225 | Allen-Bradley | CB2225 |
| R14 | Comp, 2.2K, ±5%, 1/4W | 1066-2225 | Allen-Bradley | CB2225 |
| R15 | Comp, 1K, ±5%, 1/4W | 1066-1025 | Allen-Bradley | CB1025 |

LOW FREQUENCY PHASE LOCK LOOP, 3600 (cont.)

| CKT. REF. | DESCRIPTION | CE STOCK NO. | MFR. | MFR. NO. |
|---|---|---|---|---|
| R16 | Comp, 5.1K, ±5%, 1/4W | 1066-5125 | Allen-Bradley | CB5125 |
| R17 | Comp, 12K, ±5%, 1/4W | 1066-1235 | Allen-Bradley | CB1235 |
| R18 | Comp, 220Ω, ±5%, 1/4W | 1066-2215 | Allen-Bradley | CB2215 |
| R19 | Comp, 510Ω, ±5%, 1/4W | 1066-5115 | Allen-Bradley | CB5115 |
| R20 | Comp, 510Ω, ±5%, 1/4W | 1066-5115 | Allen-Bradley | CB5115 |
| R21 | Comp, 1K, ±5%, 1/4W | 1066-1025 | Allen-Bradley | CB1025 |
| R22 | Comp, 5.1K, ±5%, 1/4W | 1066-5125 | Allen-Bradley | CB5125 |
| R23 | Comp, 1K, ±5%, 1/4W | 1066-1025 | Allen-Bradley | CB1025 |
| R24 | Comp, 510Ω, ±5%, 1/4W | 1066-5115 | Allen-Bradley | CB5115 |
| R25 | Comp, 510Ω, ±5%, 1/4W | 1066-5115 | Allen-Bradley | CB5115 |
| R26 | Comp, 220Ω, ±5%, 1/4W | 1066-2215 | Allen-Bradley | CB2215 |
| R27 | Comp, 22K, ±5%, 1/4W | 1066-2235 | Allen-Bradley | CB2235 |
| R28 | Comp, 10K, ±5%, 1/4W | 1066-1035 | Allen-Bradley | CB1035 |
| R29 | Comp, 1K, ±5%, 1/4W | 1066-1025 | Allen-Bradley | CB1025 |
| R30 | Comp, 3K, ±5%, 1/4W | 1066-3025 | Allen-Bradley | CB3025 |
| R31 | Comp, 2.2K, ±5%, 1/4W | 1066-2225 | Allen-Bradley | CB2225 |
| R32 | Comp, 200Ω, ±5%, 1/4W | 1066-2015 | Allen-Bradley | CB2015 |
| R33 | Comp, 1K, ±5%, 1/4W | 1066-1025 | Allen-Bradley | CB1025 |
| R34 | Comp, 180Ω, ±5%, 1/4W | 1066-1815 | Allen-Bradley | CB1815 |
| R35 | Comp, 100Ω, ±5%, 1/4W | 1066-1015 | Allen-Bradley | CB1015 |
| R36 | Comp, 27K, ±5%, 1/4W | 1066-2735 | Allen-Bradley | CB2735 |
| R37 | Comp, 120K, ±5%, 1/4W | 1066-1245 | Allen-Bradley | CB1245 |
| R38 | Comp, 10Ω, ±5%, 1/4W | 1066-1005 | Allen-Bradley | CB1005 |
| R39 | Comp, 10Ω, ±5%, 1/4W | 1066-1005 | Allen-Bradley | CB1005 |
| R40 | Comp, 120Ω, ±5%, 1/4W | 1066-1215 | Allen-Bradley | CB1215 |
| R41 | Comp, 2K, ±5%, 1/4W | 1066-2025 | Allen-Bradley | CB2025 |
| R42 | Comp, 2K, ±5%, 1/4W | 1066-2025 | Allen-Bradley | CB2025 |
| R43 | Comp, 1K, ±5%, 1/4W | 1066-1025 | Allen-Bradley | CB1025 |
| R44 | Comp, 68K, ±5%, 1/4W | 1066-6835 | Allen-Bradley | CB6835 |
| R45 | Comp, 18K, ±5%, 1/4W | 1066-1835 | Allen-Bradley | CB1835 |
| R46 | Comp, 1K, ±5%, 1/4W | 1066-1025 | Allen-Bradley | CB1025 |
| R47 | Comp, 1K, ±5%, 1/4W | 1066-1025 | Allen-Bradley | CB1025 |
| R48 | Comp, 1K, ±5%, 1/4W | 1066-1025 | Allen-Bradley | CB1025 |
| R49 | Comp, 1K, ±5%, 1/4W | 1066-1025 | Allen-Bradley | CB1025 |
| R50 | Comp, 1K, ±5%, 1/4W | 1066-1025 | Allen-Bradley | CB1025 |
| R51 | Comp, 27Ω, ±5%, 1/4W | 1066-2705 | Allen-Bradley | CB2705 |
| R52 | Comp, 8.2K, ±5%, 1/4W | 1066-8225 | Allen-Bradley | CB8225 |
| R53 | Comp, 15K, ±5%, 1/4W | 1066-1535 | Allen-Bradley | CB1535 |
| R54 | Comp, 100Ω, ±5%, 1/4W | 1066-1015 | Allen-Bradley | CB1015 |
| R55 | Comp, 220Ω, ±5%, 1/4W | 1066-2215 | Allen-Bradley | CB2215 |
| R56 | Comp, 470Ω, ±5%, 1/4W | 1066-4715 | Allen-Bradley | CB4715 |
| R57 | Comp, 10K, ±5%, 1/4W | 1066-1035 | Allen-Bradley | CB1035 |
| R58 | Comp, 15K, ±5%, 1/4W | 1066-1535 | Allen-Bradley | CB1535 |
| R59 | Comp, 4.7K, ±5%, 1/4W | 1066-4725 | Allen-Bradley | CB4725 |
| R60 | Comp, 100Ω, ±5%, 1/4W | 1066-1015 | Allen-Bradley | CB1015 |
| R61 | Comp, 1K, ±5%, 1/4W | 1066-1025 | Allen-Bradley | CB1025 |
| R62 | Comp, 1K, ±5%, 1/4W | 1066-1025 | Allen-Bradley | CB1025 |
| R63 | Comp, 1.5K, ±5%, 1/4W | 1066-1525 | Allen-Bradley | CB1525 |
| R64 | Comp, 10Ω, ±5%, 1/4W | 1066-1005 | Allen-Bradley | CB1005 |
| R65 | Comp, 15K, ±5%, 1/4W | 1066-1535 | Allen-Bradley | CB1535 |
| R66 | Comp, 100Ω, ±5%, 1/4W | 1066-1015 | Allen-Bradley | CB1015 |
| R67 | Comp, 15K, ±5%, 1/4W | 1066-1535 | Allen-Bradley | CB1535 |
| R68 | Comp, 560Ω, ±5%, 1/4W | 1066-5615 | Allen-Bradley | CB5615 |
| R69 | Comp, 10K, ±5%, 1/4W | 1066-1035 | Allen-Bradley | CB1035 |
| R70 | Comp, 10K, ±5%, 1/4W | 1066-1035 | Allen-Bradley | CB1035 |

LOW FREQUENCY PHASE LOCK LOOP, 3600 (cont.)

| CKT. REF. | DESCRIPTION | CE STOCK NO. | MFR. | MFR. NO. |
|---|---|---|---|---|
| R71 | Comp, 1K, ±5%, 1/4W | 1066-1025 | Allen-Bradley | CB1025 |
| R72 | Comp, 100Ω, ±5%, 1/4W | 1066-1015 | Allen-Bradley | CB1015 |
| R73 | Comp, 1K, ±5%, 1/4W | 1066-1025 | Allen-Bradley | CB1025 |
| R74 | Comp, 20K, ±5%, 1/4W | 1066-2035 | Allen-Bradley | CB2035 |
| R75 | Comp, 470Ω, ±5%, 1/4W | 1066-4715 | Allen-Bradley | CB4715 |
| R76 | Comp, 1.2K, ±5%, 1/4W | 1066-1225 | Allen-Bradley | CB1225 |
| R77 | Comp, 1K, ±5%, 1/4W | 1066-1025 | Allen-Bradley | CB1025 |
| R78 | Comp, 1.2K, ±5%, 1/4W | 1066-1225 | Allen-Bradley | CB1225 |
| R79 | Comp, 20K, ±5%, 1/4W | 1066-2035 | Allen-Bradley | CB2035 |
| R80 | Comp, 3K, ±5%, 1/4W | 1066-3025 | Allen-Bradley | CB3025 |
| R81 | Comp, 1.6K, ±5%, 1/4W | 1066-1625 | Allen-Bradley | CB1625 |
| R82 | Comp, 12K, ±5%, 1/4W | 1066-1235 | Allen-Bradley | CB1235 |
| R83 | Comp, 1.6K, ±5%, 1/4W | 1066-1625 | Allen-Bradley | CB1625 |
| R84 | Comp, 20K, ±5%, 1/4W | 1066-2035 | Allen-Bradley | CB2035 |
| R85 | Comp, 5.6K. ±5%, 1/4W | 1066-5625 | Allen-Bradley | CB5625 |
| R86 | Comp, 2.7K, ±5%, 1/4W | 1066-2725 | Allen-Bradley | CB2725 |
| R87 | Comp, 5.6K. ±5%, 1/4W | 1066-5625 | Allen-Bradley | CB5625 |
| R88 | Comp, 1K. ±5%, 1/4W | 1066-1025 | Allen-Bradley | CB1025 |
| R89 | Comp, 2.2K, ±5%, 1/4W | 1066-2225 | Allen-Bradley | CB2225 |
| R90 | Comp, 1K. ±5%, 1/4W | 1066-1025 | Allen-Bradley | CB1025 |
| R91 | Comp, 750K, ±5%, 1/4W | 1066-7545 | Allen-Bradley | CB7545 |
| R92 | Comp, 430Ω, ±5%, 1/4W | 1066-4315 | Allen-Bradley | CB4315 |
| R93 | Comp, 18K, ±5%, 1/4W | 1066-1835 | Allen-Bradley | CB1835 |
| R94 | Comp, 2K, ±5%, 1/4W | 1066-2025 | Allen-Bradley | CB2025 |
| R95 | Comp, 430Ω, ±5%, 1/4W | 1066-4315 | Allen-Bradley | CB4315 |
| R96 | Comp, 1K, ±5%, 1/4W | 1066-1025 | Allen-Bradley | CB1025 |
| R97 | Comp, 1K, ±5%, 1/4W | 1066-1025 | Allen-Bradley | CB1025 |
| R98 | Comp, 1K, ±5%, 1/4W | 1066-1025 | Allen-Bradley | CB1025 |
| R99 | Comp, 1K, ±5%, 1/4W | 1066-1025 | Allen-Bradley | CB1025 |
| R100 | Not used | | | |
| R101 | Comp, 1K, ±5%, 1/4W | 1066-1025 | Allen-Bradley | CB1025 |
| R102 | Comp, 15K, ±5%, 1/4W | 1066-1535 | Allen-Bradley | CB1535 |
| R103 | Comp, 4.7K, ±5%, 1/4W | 1066-4725 | Allen-Bradley | CB4725 |
| R104 | Comp, 220Ω, ±5%, 1/4W | 1066-2215 | Allen-Bradley | CB2215 |
| R105 | Comp, 220Ω, ±5%, 1/4W | 1066-2215 | Allen-Bradley | CB2215 |
| R106 | Comp, 51Ω, ±5%, 1/4W | 1066-5105 | Allen-Bradley | CB5105 |
| R107 | Comp, 180Ω, ±5%, 1/4W | 1066-1815 | Allen-Bradley | CB1815 |
| R108 | Comp, 10Ω, ±5%, 1/4W | 1066-1005 | Allen-Bradley | CB1005 |
| R109 | Comp, 51Ω, ±5%, 1/4W | 1066-5105 | Allen-Bradley | CB5105 |
| R110 | Comp, 27Ω, ±5%, 1/4W | 1066-2705 | Allen-Bradley | CB2705 |
| R111 | Comp, 51Ω, ±5%, 1/4W | 1066-5105 | Allen-Bradley | CB5105 |
| R112 | Comp, 51Ω, ±5%, 1/4W | 1066-5105 | Allen-Bradley | CB5105 |
| R113 | Comp, 2.7K, ±5%, 1/4W | 1066-2725 | Allen-Bradley | CB2725 |
| R114 | Comp, 3.3K, ±5%, 1/4W | 1066-3325 | Allen-Bradley | CB3325 |
| R115 | Comp, 12K, ±5%, 1/4W | 1066-1235 | Allen-Bradley | CB1235 |
| R116 | Comp, 12K, ±5%, 1/4W | 1066-1235 | Allen-Bradley | CB1235 |
| R117 | Comp, 18K, ±5%, 1/4W | 1066-1835 | Allen-Bradley | CB1835 |
| R118 | Comp, 100Ω, ±5%, 1/4W | 1066-1015 | Allen-Bradley | CB1015 |
| R119 | Comp, 120Ω, ±5%, 1/4W | 1066-1215 | Allen-Bradley | CB1215 |
| R120 | Comp, 10Ω, ±5%, 1/4W | 1066-1005 | Allen-Bradley | CB1005 |
| R121 | Comp, 10K, ±5%, 1/4W | 1066-1035 | Allen-Bradley | CB1035 |
| R122 | Comp, 1K, ±5%, 1/4W | 1066-1025 | Allen-Bradley | CB1025 |
| R123 | Comp, 1K, ±5%, 1/4W | 1066-1025 | Allen-Bradley | CB1025 |
| R124 | Comp, 6.8K, ±5%, 1/4W | 1066-6825 | Allen-Bradley | CB6825 |
| R125 | Comp, 120K, ±5%, 1/4W | 1066-1245 | Allen-Bradley | CB1245 |

LOW FREQUENCY PHASE LOCK LOOP, 3600 (cont.)

| CKT. REF. | DESCRIPTION | CE STOCK NO. | MFR. | MFR. NO. |
|---|---|---|---|---|
| R126 | Comp, 27K, ±5%, 1/4W | 1066-2735 | Allen-Bradley | CB2735 |
| R127 | Comp, 100Ω, ±5%, 1/4W | 1066-1015 | Allen-Bradley | CB1015 |
| R128 | Comp, 2.2K, ±5%, 1/4W | 1066-2225 | Allen-Bradley | CB2225 |
| R129 | Comp, 2.2K, ±5%, 1/4W | 1066-2225 | Allen-Bradley | CB2225 |
| R130 | Comp, 20K, ±5%, 1/4W | 1066-2035 | Allen-Bradley | CB2035 |
| R131 | Comp, 100Ω, ±5%, 1/4W | 1066-1015 | Allen-Bradley | CB1015 |
| R132 | Comp, 7.5K, ±5%, 1/4W | 1066-7525 | Allen-Bradley | CB7525 |
| R133 | Comp, 7.5K, ±5%, 1/4W | 1066-7525 | Allen-Bradley | CB7525 |
| R134 | Comp, 20K, ±5%, 1/4W | 1066-2035 | Allen-Bradley | CB2035 |
| R135 | Comp, 100Ω, ±5%, 1/4W | 1066-1015 | Allen-Bradley | CB1015 |
| R136 | Comp, 10K, ±5%, 1/4W | 1066-1035 | Allen-Bradley | CB1035 |
| R137 | Comp, 15K, ±5%, 1/4W | 1066-1535 | Allen-Bradley | CB1535 |
| R138 | Comp, 10K, ±5%, 1/4W | 1066-1035 | Allen-Bradley | CB1035 |
| R139 | Comp, 20K, ±5%, 1/4W | 1066-2035 | Allen-Bradley | CB2035 |
| R140 | Comp, 12K, ±5%, 1/4W | 1066-1235 | Allen-Bradley | CB1235 |
| R141 | Comp, 27Ω, ±5%, 1/4W | 1066-2705 | Allen-Bradley | CB2705 |
| R142 | Comp, 2.2K, ±5%, 1/4W | 1066-2225 | Allen-Bradley | CB2225 |
| R143 | Comp, 16K, ±5%, 1/4W | 1066-1635 | Allen-Bradley | CB1635 |
| R144 | Comp, 16K, ±5%, 1/4W | 1066-1635 | Allen-Bradley | CB1635 |
| R145 | Comp, 15K, ±5%, 1/4W | 1066-1535 | Allen-Bradley | CB1535 |
| R146 | Comp, 15K, ±5%, 1/4W | 1066-1535 | Allen-Bradley | CB1535 |
| R147 | Comp, 1K, ±5%, 1/4W | 1066-1025 | Allen-Bradley | CB1025 |
| R148 | Comp, 620Ω, ±5%, 1/4W | 1066-6215 | Allen-Bradley | CB6215 |
| R149 | Comp, 1K, ±5%, 1/4W | 1066-1025 | Allen-Bradley | CB1025 |
| R150 | Comp, 3.3K, ±5%, 1/4W | 1066-3325 | Allen-Bradley | CB3325 |
| R151 | Comp, 5.1K, ±5%, 1/4W | 1066-5125 | Allen-Bradley | CB5125 |
| R152 | Comp, 240Ω, ±5%, 1/4W | 1066-2415 | Allen-Bradley | CB2415 |
| R153 | Comp, 1M, ±5%, 1/4W | 1066-1055 | Allen-Bradley | CB1055 |
| R154 | Comp, 18K, ±5%, 1/4W | 1066-1835 | Allen-Bradley | CB1835 |
| R155 | Comp, 200Ω, ±5%, 1/4W | 1066-2015 | Allen-Bradley | CB20 |
| R156 | Comp, 3.9K, ±5%, 1/4W | 1066-3925 | Allen-Bradley | CB3925 |
| R157 | Comp, 240Ω, ±5%, 1/4W | 1066-2415 | Allen-Bradley | CB2415 |
| R158 | Comp, 1K, ±5%, 1/4W | 1066-1025 | Allen-Bradley | CB1025 |
| R159 | Comp, 1K, ±5%, 1/4W | 1066-1025 | Allen-Bradley | CB1025 |
| R160 | Comp, 1K, ±5%, 1/4W | 1066-1025 | Allen-Bradley | CB1025 |
| R161 | Comp, 1K, ±5%, 1/4W | 1066-1025 | Allen-Bradley | CB1025 |
| R162 | Comp, 12K, ±5%, 1/4W | 1066-1235 | Allen-Bradley | CB1235 |
| R163 | Comp, 10Ω, ±5%, 1/4W | 1066-1005 | Allen-Bradley | CB1005 |
| | TRANSFORMERS | | | |
| T1 | Trifiliar | 1579-0017 | Cushman | |
| T2 | Trifiliar | 1579-0017 | Cushman | |
| T3 | Trifiliar | 1579-0017 | Cushman | |
| T4 | Trifiliar | 1579-0017 | Cushman | |
| T5 | Trifiliar | 1579-0017 | Cushman | |
| T6 | Trifiliar | 1579-0017 | Cushman | |
| T7 | Trifiliar | 1579-0017 | Cushman | |
| | INTEGRATED CIRCUITS | | | |
| U1 | IC, Volt, Pos, Rgltr, MC7305CP5 | 2025-0088 | Motorola | MC7805CP |
| U2 | IC, Op. Ampl. LM308N | 2025-0070 | National | LM308N |
| U3 | IC, Bal, Mod. Demond, MC1496 | 2025-0112 | Motorola | MC1496 |
| U4 | IC, Phase Detector, MC4044P | 2025-0066 | Motorola | MC4044P |
| U5 | IC, SN7490N | 2025-0002 | T.I. | SN7490N |

LOW FREQUENCY PHASE LOCK LOOP, 3600 (cont.)

| CKT. REF. | DESCRIPTION | CE STOCK NO. | MFR. | MFR. NO. |
|---|---|---|---|---|
| U6 | IC, Op. Ampl. LM308N | 2025-0070 | National | LM308N |
| U7 | IC, Phase Detector, MC4044P | 2025-0066 | Motorola | MC4044P |
| U8 | IC, SN7490N | 2025-0002 | T.I. | SN7490N |
| U9 | IC, SN7490N | 2025-0002 | T.I. | SN7490N |
| U10 | IC, Op. Ampl, LM308N | 2025-0070 | National | LM308N |
| U11 | IC, Phase Detector, MC4044P | 2025-0066 | Motorola | MC4044P |

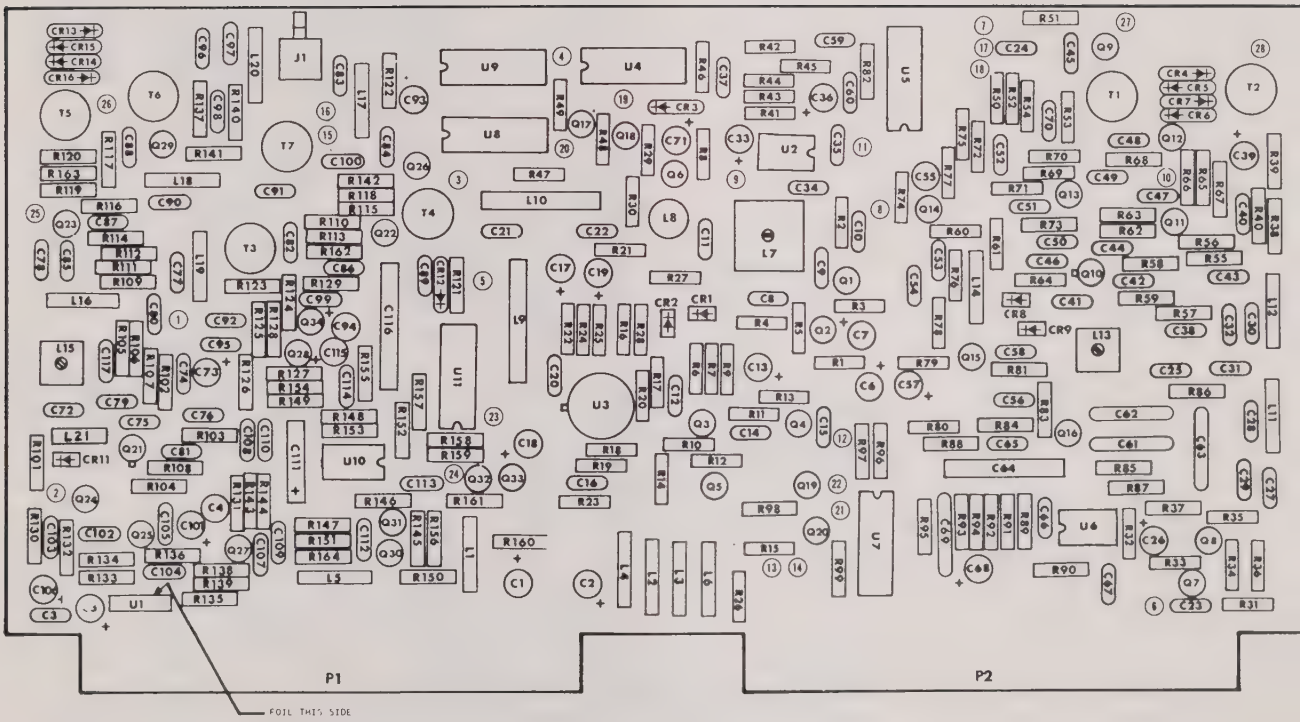
P1
P2
FOIL THIS SIDE

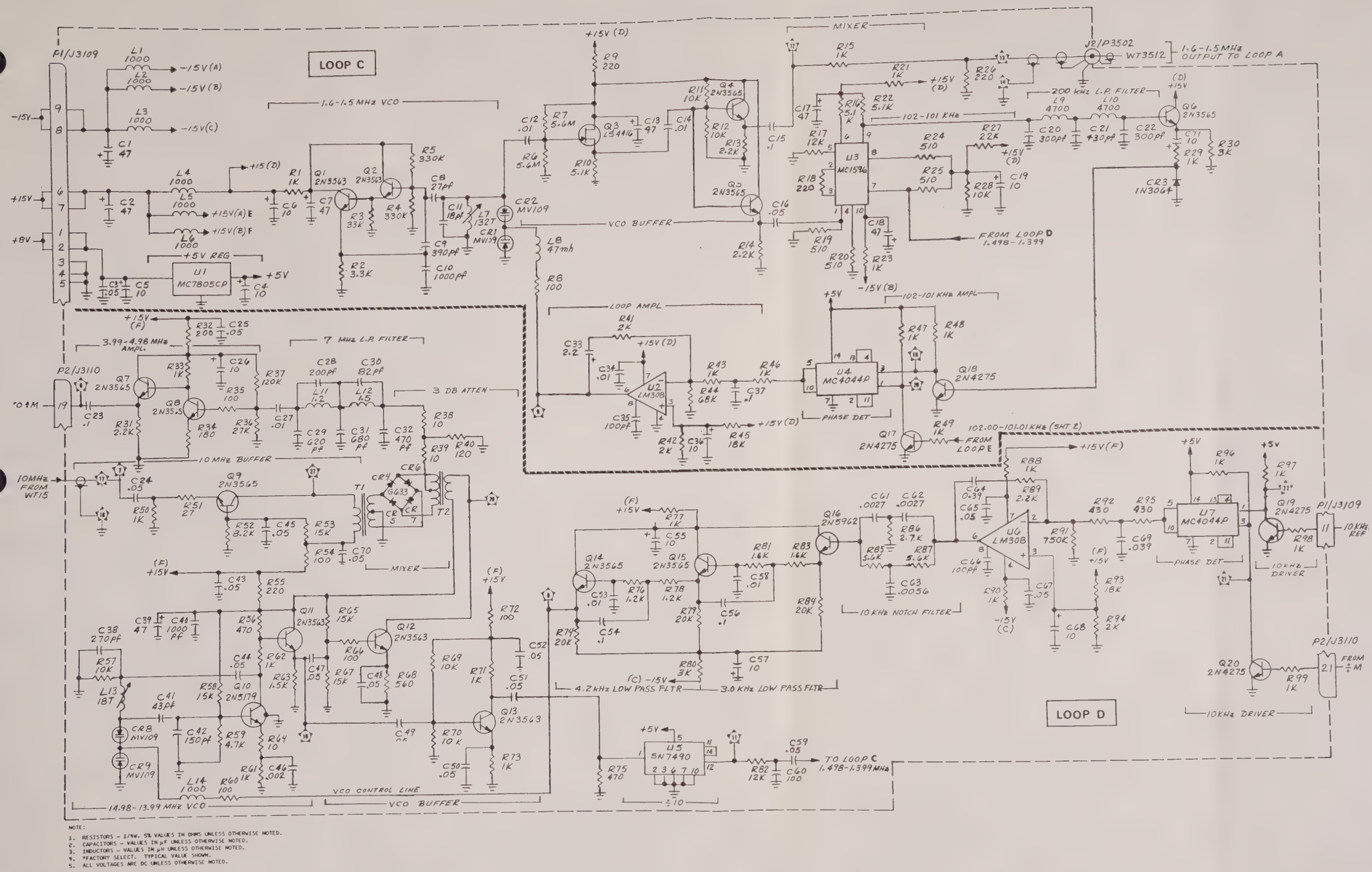


NOTE:
1. RESISTORS - 1/4W, 5% VALUES IN OHMS UNLESS OTHERWISE NOTED.
2. CAPACITORS - VALUES IN μF UNLESS OTHERWISE NOTED.
3. INDUCTORS - VALUES IN μH UNLESS OTHERWISE NOTED.
4. *FACTORY SELECT. TYPICAL VALUE SHOWN.
5. ALL VOLTAGES ARE DC UNLESS OTHERWISE NOTED.

5601-0063-3

Figure 25. Low Frequency Phase Lock Loop, 3600, sheet 1.

3-91/3-92

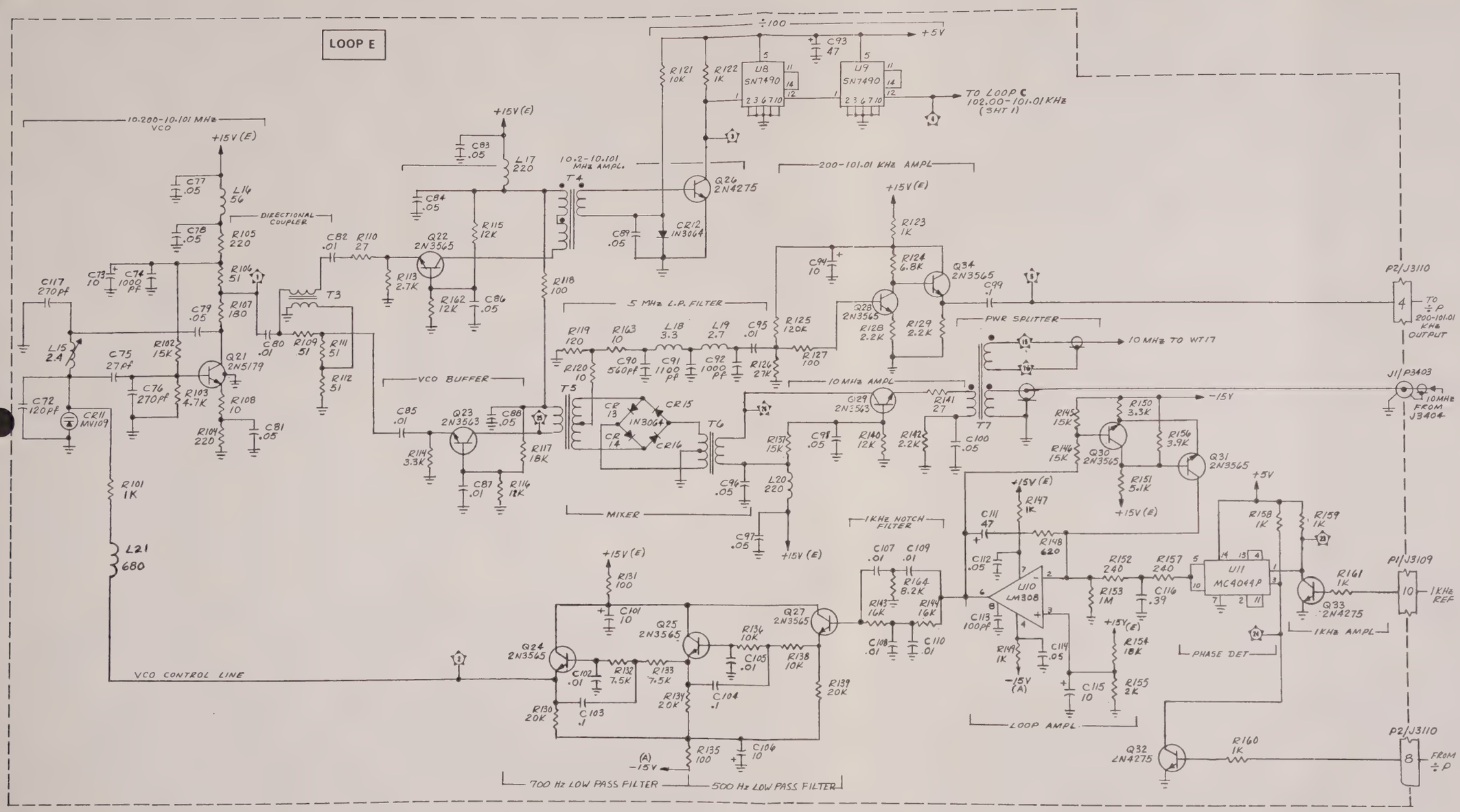


NOTE:

1. RESISTORS – 1/4W, 5% VALUES IN OHMS UNLESS OTHERWISE NOTED.
2. CAPACITORS – VALUES IN µF UNLESS OTHERWISE NOTED.
3. INDUCTORS – VALUES IN µH UNLESS OTHERWISE NOTED.
4. *FACTORY SELECT. TYPICAL VALUE SHOWN.
5. ALL VOLTAGES ARE DC UNLESS OTHERWISE NOTED.

5601··0063··3

Figure 26. Low Frequency Phase Lock Loop, 3600, sheet 2.

PROGRAMMABLE DIVIDERS, 4200

| CKT. REF. | DESCRIPTION | CE STOCK NO. | MFR. | MFR. NO. |
|---|---|---|---|---|
| 4200 | Programmable Dividers | 7001-0429 | Cushman | |
| | P.C. Board | 1780-0564 | Cushman | |
| | CAPACITORS | | | |
| C1 | Cer, 10μF, +50-20%, 35V | 1011-0006 | ITT | TAG-10/35-20 |
| C2 | Cer, 10μF, +50-20%, 35V | 1011-0006 | ITT | TAG-10/35-20 |
| C3 | Cer, .05μF, +80-20%, 25V | 1005-0014 | Erie | 5855-505-Y5U0-503Z |
| C4 | Cer, 10μF, +50-20%, 35V | 1011-0006 | ITT | TAG-10/35-20 |
| C5 | Cer, 10μF, +50-20%, 35V | 1011-0006 | ITT | TAG-10/35-20 |
| C6 | Cer, .05μF, +80-20%, 25V | 1005-0014 | Erie | 5855-505-Y5U0-503Z |
| C7 | Cer, 10μF, +50-20%, 35V | 1011-0006 | ITT | TAG-10/35-20 |
| C8 | Cer, 10μF, +50-20%, 35V | 1011-0006 | ITT | TAG-10/35-20 |
| C9 | Mica, 330pF, ±5%, 500V | 1002-0032 | Elmenco | DM15-F-331J |
| C10 | Cer, .05μF, +80-20%, 25V | 1005-0014 | Erie | 5855-505-Y5U0-503Z |
| C11 | Cer, .05μF, +80-20%, 25V | 1005-0014 | Erie | 5855-505-Y5U0-503Z |
| C12 | Mica, 75pF, ±5%, 500V | 1002-0025 | Elmenco | DM15-E-750J |
| C13 | Cer, 10μF, +50-20%, 35V | 1011-0006 | ITT | TAG-10/35-20 |
| C14 | Mica, 91pF, ±5%, 500V | 1002-0027 | Elmenco | DM15-F-910J |
| C15 | Cer, .05μF, +80-20%, 25V | 1005-0014 | Erie | 5855-505-Y5U0-503Z |
| C16 | Cer, 10μF, +50-20%, 35V | 1011-0006 | ITT | TAG-10/35-20 |
| C17 | Cer, 10μF, +50-20%, 35V | 1011-0006 | ITT | TAG-10/35-20 |
| C18 | Cer, 10μF, +50-20%, 35V | 1011-0006 | ITT | TAG-10/35-20 |
| C19 | Cer, .05μF, +80-20%, 25V | 1005-0014 | Erie | 5855-505-Y5U0-503Z |
| C20 | Cer, 10μF, +50-20%, 35V | 1011-0006 | ITT | TAG-10/35-20 |
| C21 | Cer, .05μF, +80-20%, 25V | 1005-0014 | Erie | 5855-505-Y5U0-503Z |
| C22 | Cer, 10μF, +50-20%, 35V | 1011-0006 | ITT | TAG-10/35-20 |
| C23 | Cer, .05μF, +80-20%, 25V | 1005-0014 | Erie | 5855-505-Y5U0-503Z |
| C24 | Cer, 10μF, +50-20%, 35V | 1011-0006 | ITT | TAG-10/35-20 |
| C25 | Cer, 10μF, +50-20%, 35V | 1011-0006 | ITT | TAG-10/35-20 |
| C26 | Cer, 10μF, +50-20%, 35V | 1011-0006 | ITT | TAG-10/35-20 |
| C27 | Cer, .05μF, +80-20%, 25V | 1005-0014 | Erie | 5855-505-Y5U0-503Z |
| C28 | Cer, 10μF, +50-20%, 35V | 1011-0006 | ITT | TAG-10/35-20 |
| C29 | Cer, .05μF, +80-20%, 25V | 1005-0014 | Erie | 5855-505-Y5U0-503Z |
| C30 | Cer, .05μF, +80-20%, 25V | 1005-0014 | Erie | 5855-505-Y5U0-503Z |
| C31 | Cer, 10μF, +50-20%, 35V | 1011-0006 | ITT | TAG-10/35-20 |
| | CONNECTOR | | | |
| J1 | Smb, 50 Ohm, Rt, Ang, JK, PC, MT. | 2536-0060 | Cablewave | 700214NP |
| | INDUCTOR | | | |
| L1 | Not Used | | | |
| | TRANSISTORS | | | |
| Q1 | Si, NPN, 2N3565 | 1272-0017 | Fairchild | 2N3565 |
| Q2 | Si, NPN, 2N3565 | 1272-0017 | Fairchild | 2N3565 |
| Q3 | Si, NPN, 2N3565 | 1272-0017 | Fairchild | 2N3565 |
| Q4 | Si, NPN, 2N3565 | 1272-0017 | Fairchild | 2N3565 |
| Q5 | Si, NPN, 2N3565 | 1272-0017 | Fairchild | 2N3565 |
| Q6 | Si, NPN, 2N3565 | 1272-0017 | Fairchild | 2N3565 |
| Q7 | Si, NPN, 2N3563 | 1272-0022 | Fairchild | 2N3563 |
| Q8 | Si, NPN, 2N3563 | 1272-0022 | Fairchild | 2N3563 |
| Q9 | Si, NPN, 2N3563 | 1272-0022 | Fairchild | 2N3563 |

PROGRAMMABLE DIVIDERS, 4200 (cont.)

| CKT. REF. | DESCRIPTION | CE STOCK NO. | MFR. | MFR. NO. |
|---|---|---|---|---|
| | RESISTORS | | | |
| R1 | Comp, 56Ω, ±5%, 1/4W | 1066-5605 | Allen-Bradley | CB5605 |
| R2 | Comp, 1K, ±5%, 1/4W | 1066-1025 | Allen-Bradley | CB1025 |
| R3 | Comp, 470Ω, ±5%, 1/4W | 1066-4715 | Allen-Bradley | CB4715 |
| R4 | Comp, 5.6K, ±5%, 1/4W | 1066-5625 | Allen-Bradley | CB5625 |
| R5 | Comp, 180Ω, ±5%, 1/4W | 1066-1815 | Allen-Bradley | CB1815 |
| R6 | Comp, 10Ω, ±5%, 1/4W | 1066-1005 | Allen-Bradley | CB1005 |
| R7 | Comp, 390Ω, ±5%, 1/4W | 1066-3915 | Allen-Bradley | CB3915 |
| R8 | Comp, 5.1K, ±5%, 1/4W | 1066-5125 | Allen-Bradley | CB5125 |
| R9 | Comp, 3.3K, ±5%, 1/4W | 1066-3325 | Allen-Bradley | CB3325 |
| R10 | Comp, 56Ω, ±5%, 1/4W | 1066-5605 | Allen-Bradley | CB5605 |
| R11 | Comp, 1K, ±5%, 1/4W | 1066-1025 | Allen-Bradley | CB1025 |
| R12 | Comp, 470Ω, ±5%, 1/4W | 1066-4715 | Allen-Bradley | CB4715 |
| R13 | Comp, 5.6K, ±5%, 1/4W | 1066-5625 | Allen-Bradley | CB5625 |
| R14 | Comp, 10Ω, ±5%, 1/4W | 1066-1005 | Allen-Bradley | CB1005 |
| R15 | Comp, 180Ω, ±5%, 1/4W | 1066-1815 | Allen-Bradley | CB1815 |
| R16 | Comp, 390Ω, ±5%, 1/4W | 1066-3915 | Allen-Bradley | CB3905 |
| R17 | Comp, 3.3K, ±5%, 1/4W | 1066-3325 | Allen-Bradley | CB3325 |
| R18 | Comp, 15K, ±5%, 1/4W | 1066-1535 | Allen-Bradley | CB1535 |
| R19 | Comp, 2.4K, ±5%, 1/4W | 1066-2425 | Allen-Bradley | CB2425 |
| R20 | Comp, 3K, ±5%, 1/4W | 1066-3025 | Allen-Bradley | CB3025 |
| R21 | Comp, 56Ω, ±5%, 1/4W | 1066-5605 | Allen-Bradley | CB5605 |
| R22 | Comp, 3K, ±5%, 1/4W | 1066-3025 | Allen-Bradley | CB3025 |
| R23 | Comp, 1K, ±5%, 1/4W | 1066-1025 | Allen-Bradley | CB1025 |
| R24 | Comp, 2.4K, ±5%, 1/4W | 1066-2425 | Allen-Bradley | CB2425 |
| R25 | Comp, 2.4K, ±5%, 1/4W | 1066-2425 | Allen-Bradley | CB2425 |
| R26 | Comp, 3K, ±5%, 1/4W | 1066-3025 | Allen-Bradley | CB3025 |
| R27 | Comp, 470Ω, ±5%, 1/4W | 1066-4715 | Allen-Bradley | CB4715 |
| R28 | Comp, 1.5K, ±5%, 1/4W | 1066-1525 | Allen-Bradley | CB1525 |
| R29 | Comp, 10Ω, ±5%, 1/4W | 1066-1005 | Allen-Bradley | CB1005 |
| R30 | Comp, 180Ω, ±5%, 1/4W | 1066-1815 | Allen-Bradley | CB1815 |
| R31 | Comp, 390Ω, ±5%, 1/4W | 1066-3915 | Allen-Bradley | CB3915 |
| R32 | Comp, 2K, ±5%, 1/4W | 1066-2025 | Allen-Bradley | CB2025 |
| R33 | Comp, 3.3K, ±5%, 1/4W | 1066-3325 | Allen-Bradley | CB3325 |
| R34 | Comp, 3.3K, ±5%, 1/4W | 1066-3325 | Allen-Bradley | CB3325 |
| R35 | Comp, 10Ω, ±5%, 1/4W | 1066-1005 | Allen-Bradley | CB1005 |
| R36 | Comp, 10Ω, ±5%, 1/4W | 1066-1005 | Allen-Bradley | CB1005 |
| R37 | Comp, 5.1K, ±5%, 1/4W | 1066-5125 | Allen-Bradley | CB5125 |
| R38 | Comp, 5.1K, ±5%, 1/4W | 1066-5125 | Allen-Bradley | CB5125 |
| R39 | Comp, 5.1K, ±5%, 1/4W | 1066-5125 | Allen-Bradley | CB5125 |
| R40 | Comp, 10Ω, ±5%, 1/4W | 1066-1005 | Allen-Bradley | CB1005 |
| | INTEGRATED CIRCUITS | | | |
| U1 | IC, SN74L00N, Quad 2-Input, Pos, NAND Gate | 2025-0036 | T.I. | SN74L00N |
| U2 | IC, SN74LS04N, Hex Inverter | 2025-0084 | T.I. | SN74LS04N |
| U3 | IC, SN74S11N, Triple 3-Input, Pos, AND Gate | 2025-0082 | T.I. | SN74S11N |
| U4 | IC, SN74L00N, Quad 2-Input, Pos, NAND Gate | 2025-0036 | T.I. | SN74L00N |
| U5 | IC, SN74LS04N, Hex Inverter | 2025-0083 | T.I. | SN74LS04N |
| U6 | IC, SN74L04N, Hex Inverter | 2025-0038 | T.I. | SN74L04N |
| U7 | IC, SN74196N, Decade Counters | 2025-0016 | T.I. | SN74196N |
| U8 | IC, SN74196N, Decade Counters | 2025-0016 | T.I. | SN74196N |
| U9 | IC, SN74196N, Decade Counters | 2025-0016 | T.I. | SN474196N |
| U10 | IC, SN74S112N, Dual J-K Flip-Flop | 2025-0086 | T.I. | SN74S112N |

PROGRAMMABLE DIVIDERS, 4200 (cont.)

| CKT. REF. | DESCRIPTION | CE STOCK NO. | MFR. | MFR. NO. |
|---|---|---|---|---|
| U11 | IC, SN74L192N, Sync, 4-Bit, Up/ Down Cntr | 2025-0081 | T.I. | SN74L192N |
| U12 | IC, SN74L192N, Sync, 4-Bit, Up/ Down Cntr | 2025-0081 | T.I. | SN74L192N |
| U13 | IC, SN74LS11N, Triple 3-Input, Pos. AND Gate | 2025-0109 | T.I. | SN74LS11N |
| U14 | IC, SN74LS73N, Dual J-K Flip-Flop | 2025-0110 | T.I. | SN74LS73N |
| U15 | IC, SN74LS08N, Quad 2-Input, Pos AND Gate | 2025-0087 | T.I. | SN74LS08N |
| U16 | IC, SN74LS32N, Quad 2-Input, Pos OR Gate | 2025-0085 | T.I. | SN74LS32N |
| U17 | IC, SN74LS196N, Decade Counters | 2025-0111 | T.I. | SN74LS196N |
| U18 | IC, SN74LS196N, Decade Counters | 2025-0111 | T.I. | SN74LS196N |
| U19 | IC, SN74LS196N, Decade Counters | 2025-0111 | T.I. | SN74LS196N |
| U20 | IC, SN74LS73N, Dual, J-K, Flip-Flop | 2025-0110 | T.I. | SN74LS73N |
| U21 | IC, MC7805CP, 5V Rgltr | 2025-0088 | Motorola | MC7805CP |
| U22 | IC, MC7805CP, 5V Rgltr | 2025-0088 | Motorola | MC7805CP |
| U23 | IC, SN74L03N, Quad, 2-Input Pos NAND Gate | 2025-0080 | T.I. | SN74L03N |

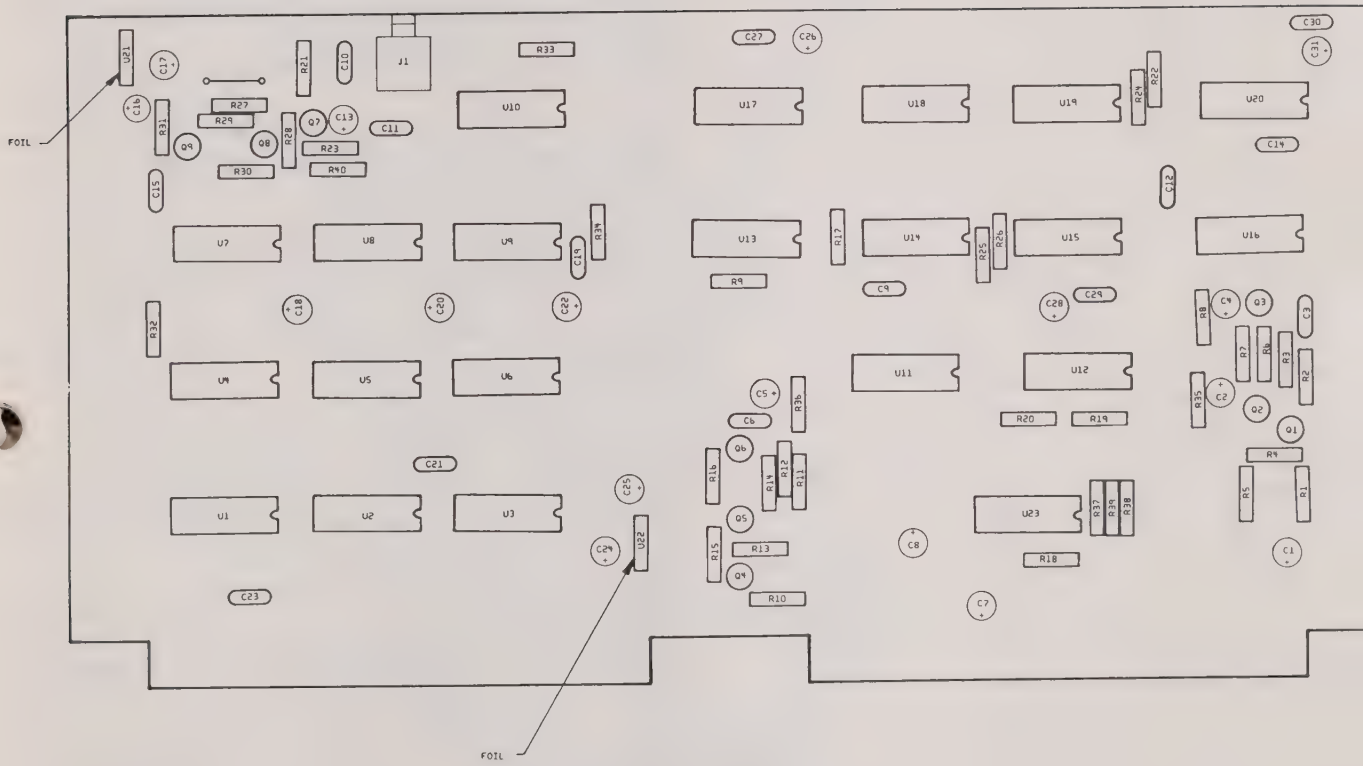
FOIL
FOIL
J1
U1
U2
U3
U4
U5
U6
U7
U8
U9
U10
U11
U12
U13
U14
U15
U16
U17
U18
U19
U20
U21
U22
U23
Q1
Q2
Q3
Q4
Q5
Q6
Q7
Q8
Q9
R1
R2
R3
R4
R5
R6
R7
R8
R9
R10
R11
R12
R13
R14
R15
R16
R17
R18
R19
R20
R21
R22
R23
R24
R25
R26
R27
R28
R29
R30
R31
R32
R33
R34
R35
R36
R37
R38
R39
R40
C1
C2
C3
C4
C5
C6
C7
C8
C9
C10
C11
C12
C13
C14
C15
C16
C17
C18
C19
C20
C21
C22
C23
C24
C25
C26
C27
C28
C29
C30
C31

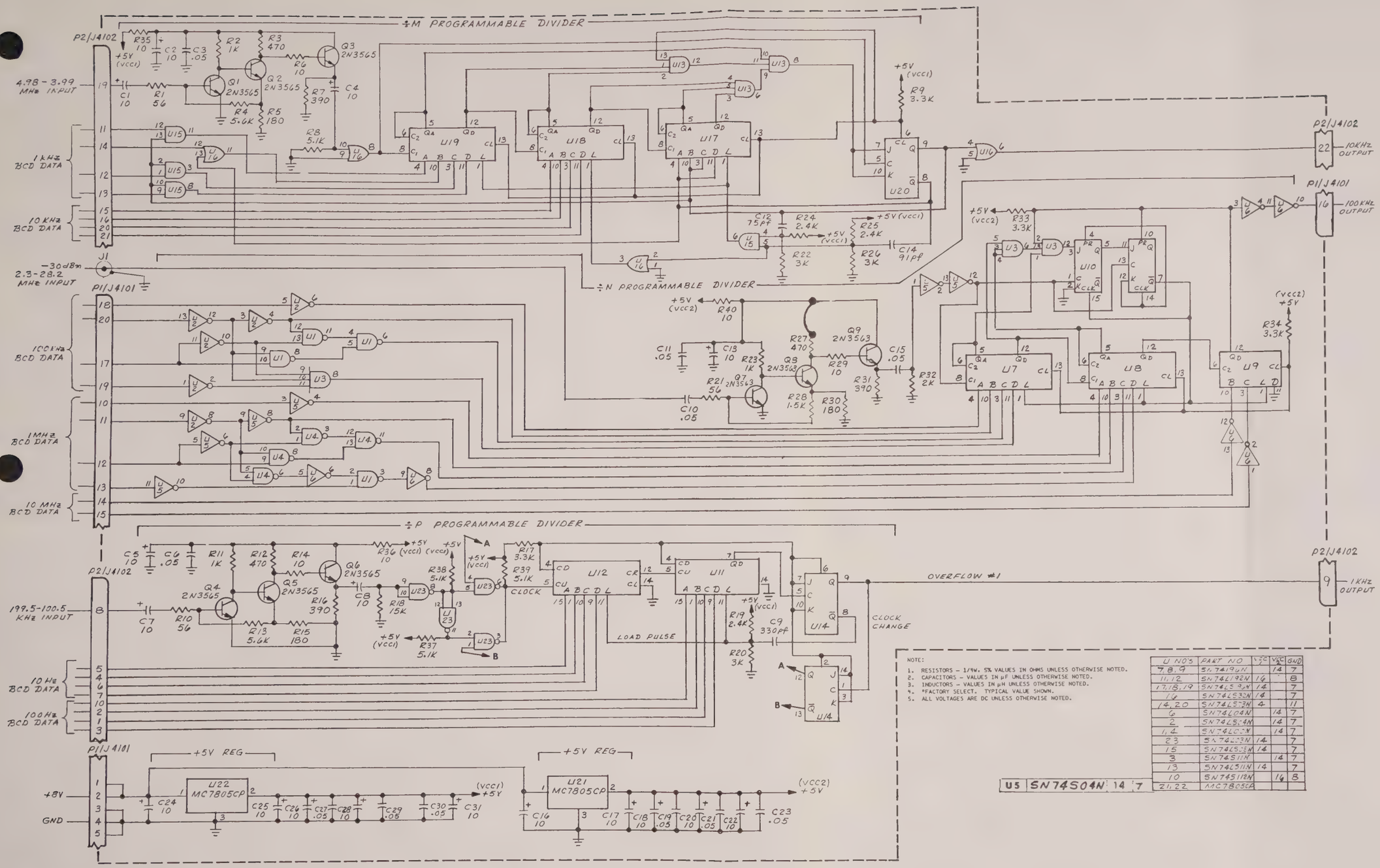


NOTE:
1. RESISTORS – 1/4W, 5% VALUES IN OHMS UNLESS OTHERWISE NOTED.
2. CAPACITORS – VALUES IN μF UNLESS OTHERWISE NOTED.
3. INDUCTORS – VALUES IN μH UNLESS OTHERWISE NOTED.
4. *FACTORY SELECT. TYPICAL VALUE SHOWN.
5. ALL VOLTAGES ARE DC UNLESS OTHERWISE NOTED.

| U NO'S | PART NO. | VCC | VCC | GND |
|---|---|---|---|---|
| 7,8,9 | SN7419ON | | 14 | 7 |
| 11,12 | SN7421ON | 16 | | 8 |
| 17,18,19 | SN74LS75N | 14 | | 7 |
| 16 | SN74LS32N | 14 | | 7 |
| 14,20 | SN74LS74N | 4 | | 11 |
| 6 | SN74LO4N | | 14 | 7 |
| 2 | SN74LS04N | | 14 | 7 |
| 1,4 | SN74LO3N | | 14 | 7 |
| 23 | SN74L93N | 14 | | 7 |
| 15 | SN74LS93N | 14 | | 7 |
| 3 | SN74S11N | | 14 | 7 |
| 13 | SN74LS11N | 14 | | 7 |
| 10 | SN74S112N | | 16 | 8 |
| 21,22 | MC7805CP | | | |
| U5 | SN74S04N | 14 | | 7 |

5601-0063-3

Figure 27. Programmable Dividers, 4200.

3-99/3-100

SECOND I. F. & MIXER, 4300

| CKT. REF. | DESCRIPTION | CE STOCK NO. | MFR. | MFR. NO. |
|---|---|---|---|---|
| 4300 M1 | Second IF and Mixer PCB Assy | 7001-0311 | Cushman | |
| | P.C. Board | 1780-0549 | Cushman | |
| | CAPACITORS | | | |
| C1 | Cer, .05μF, +80-20%, 25V | 1005-0014 | Erie | 5855-505-Y5U0-503Z |
| C2 | Tant, 10μF, +50-20%, 35V | 1011-0006 | ITT | TAG-10/35-20 |
| C3 | Cer, .01μF, +80-20%, 25V | 1005-0013 | Erie | 5835-512-Y5U-103Z |
| C4 | Elct, 100μF, +75-10%, 12V | 1013-0011 | Sprague | 30D107G012CC5 |
| C5 | Elct, 100μF, +75-10%, 12V | 1013-0011 | Sprague | 30D107G012CC5 |
| C6 | Cer, .05μF, +80-20%, 25V | 1005-0014 | Erie | 5855-505-Y5U0-503Z |
| C7 | Tant, 10μF, +50-20%, 35V | 1011-0006 | ITT | TAG-10/35-20 |
| C8 | Cer, .05μF, +80-20%, 25V | 1005-0014 | Erie | 5855-505-Y5U0-503Z |
| C9 | Tant, 10μF, +50-20%, 35V | 1011-0006 | ITT | TAG-10/35-20 |
| C10 | Cer, .01μF, +80-20%, 25V | 1005-0013 | Erie | 5835-512-Y5U-103Z |
| C11 | Poly, .01μF, ±10%, 200V | 1008-0043 | Sprague | 225P10392XA3 |
| C12 | Cer, .01μF, +80-20%, 35V | 1005-0013 | Erie | 5835-512-Y5U-103Z |
| C13 | Cer, .01μF, +80-20%, 35V | 1005-0013 | Erie | 5835-512-Y5U-103Z |
| C14 | Tant, 10μF, +50-20%, 35V | 1011-0006 | ITT | TAG-10/35-20 |
| C15 | Poly, .068μF, ±10%, 100V | 1008-0036 | Sprague | 225P68391WA3 |
| C16 | Cer, .01μF, +80-20%, 25V | 1005-0013 | Erie | 5835-512-Y5U-103Z |
| C17 | Poly, .0027μF, ±10%, 100V | 1008-0009 | Sprague | 225P27291WA3 |
| C18 | Poly, .0056μF, ±10%, 100V | 1008-0022 | Sprague | 225P56291WA3 |
| C19 | Poly, .0027μF, ±10%, 100V | 1008-0009 | Sprague | 225P27291WA3 |
| C20 | Poly, .1μF, ±10%, 100V | 1008-0031 | Sprague | 225P10491WA3 |
| C21 | Poly, .01μF, ±10%, 200V | 1008-0043 | Sprague | 225P10392XA3 |
| C22 | Tant, 10μF, +50-20%, 35V | 1011-0006 | ITT | TAG-10/35-20 |
| C23 | Poly, .1μF, ±10%, 100V | 1008-0031 | Sprague | 225P10491WA3 |
| C24 | Poly, .01μF, ±10%, 200V | 1008-0043 | Sprague | 225P10392X43 |
| C25 | Mica, 270pF, ±5%, 500V | 1002-0031 | Elmenco | DM15-F-271J |
| C26 | Mica, 150pF, ±5%, 500V | 1002-0021 | Elmenco | DM15-F-151J |
| C27 | Cer, .05μF, +80-20%, 25V | 1005-0014 | Erie | 5855-505-Y5U0-503Z |
| C28 | Mica, 68pF, ±5%, 500V | 1002-0013 | Elmenco | DM15-E-680J |
| C29 | Tant, 10μF, +50-20%, 35V | 1011-0006 | ITT | TAG-10/35-20 |
| C30 | Mica, 220pF, ±5%, 500V | 1002-0029 | Elmenco | DM15-F-221J |
| C31 | Cer, .01μF, +80-20%, 25V | 1005-0013 | Erie | 5835-512-Y5U-103Z |
| C32 | Cer, .002μF, ±20%, 500V | 1005-0003 | Erie | 831-596-Z5U-202M |
| C33 | Tant, 10μF, +50-20%, 35V | 1011-0006 | ITT | TAG-10/35-20 |
| C34 | Cer, .01μF, +80-20%, 25V | 1005-0013 | Erie | 5835-512-Y5U-103Z |
| C35 | Tant, 10μF, +50-20%, 35V | 1011-0006 | ITT | TAG-10/35-20 |
| C36 | Mica, 680pF, ±5%, 500V | 1002-0022 | Elmenco | DM15-F-681J |
| C37 | Cer, .01μF, +80-20%, 25V | 1005-0013 | Erie | 5835-512-Y5U-103Z |
| C38 | Mica, 680pF, ±5%, 500V | 1002-0022 | Elmenco | DM15-F-681J |
| C39 | Cer, .01μF, +80-20%, 25V | 1005-0013 | Erie | 5835-512-Y5U-103Z |
| C40 | Cer, .01μF, +80-20%, 25V | 1005-0013 | Erie | 5835-512-Y5U-103Z |
| C41 | Mica, 91pF, ±5%, 500V | 1002-0027 | Elmenco | DM15-F-910J |
| C42 | Cer, .01μF, +80-20%, 25V | 1005-0013 | Erie | 5835-512-Y5U-103Z |
| C43 | Cer, .01μF, +80-20%, 25V | 1005-0013 | Erie | 5835-512-Y5U-103Z |
| C44 | Tant, 10μF, +50-20%, 35V | 1011-0006 | ITT | TAG-10/35-20 |
| C45 | Cer, .01μF, +80-20%, 25V | 1005-0013 | Erie | 5835-512-Y5U-103Z |
| C46 | Cer, .01μF, +80-20%, 25V | 1005-0013 | Erie | 5835-512-Y5U-103Z |
| C47 | Mica, 1000pF, ±5%, 100V | 1002-0015 | Elmenco | DM15-F-102J |
| C48 | Cer, .01μF, +80-20%, 25V | 1005-0013 | Erie | 5835-512-Y5U-103Z |
| C49 | Cer, .01μF, +80-20%, 25V | 1005-0013 | Erie | 5835-512-Y5U-103Z |
| C50 | Cer, .01μF, +80-20%, 25V | 1005-0013 | Erie | 5835-512-Y5U-103Z |

SECOND I. F. & MIXER, 4300 (cont.)

| CKT. REF. | DESCRIPTION | CE STOCK NO. | MFR. | MFR. NO. |
|---|---|---|---|---|
| C51 | Cer, .01μF, +80-20%, 25V | 1005-0013 | Erie | 5835-512-Y5U-103Z |
| C52 | Cer, .01μF, +80-20%, 25V | 1005-0013 | Erie | 5835-512-Y5U-103Z |
| C53 | Cer, .01μF, +80-20%, 25V | 1005-0013 | Erie | 5835-512-Y5U-103Z |
| C54 | Mica, 4300pF, ±5%, 500V | 1002-0089 | Elmenco | DM19-F-432J |
| C55 | Mica, 51pF, ±5%, 500V | 1002-0045 | Elmenco | DM15-E-510J |
| C56 | Mica, 6200pF, ±5%, 300V | 1002-0085 | Elmenco | DM10-622J |
| C57 | Mica, 20pF, ±5%, 500V | 1002-0060 | Elmenco | DM15-200J |
| C58 | Mica, 4300pF, ±5%, 500V | 1002-0089 | Sprague | MWC-432 |
| C59 | Cer, .01μF, +80-20%, 25V | 1005-0013 | Erie | 5835-512-Y5U-103Z |
| C60 | Cer, .01μF, +80-20%, 25V | 1005-0013 | Erie | 5835-512-Y5U-103Z |
| C61 | Cer, .01μF, +80-20%, 25V | 1005-0013 | Erie | 5835-512-Y5U-103Z |
| C62 | Cer, .01μF, +80-20%, 25V | 1005-0013 | Erie | 5835-512-Y5U-103Z |
| C63 | Cer, 3.3pF, ±.25pF, 500V | 1005-0011 | Erie | 301-000-C0J0-339C |
| C64 | Cer, .01μF, +80-20%, 25V | 1005-0013 | Erie | 5835-512-Y5U-103Z |
| C65 | Cer, 3.3pF, ±.25pF, 500V | 1005-0011 | Erie | 301-000-C0J0-339C |
| C66 | Cer, .01μF, +80-20%, 25V | 1005-0013 | Erie | 5835-512-Y5U-103Z |
| C67 | Cer, .01μF, +80-20%, 25V | 1005-0013 | Erie | 5835-512-Y5U-103Z |
| C68 | Cer, .01μF, +80-20%, 25V | 1005-0013 | Erie | 5835-512-Y5U-103Z |
| C69 | Cer, .01μF, +80-20%, 25V | 1005-0013 | Erie | 5835-512-Y5U-103Z |
| C70 | Cer, .01μF, +80-20%, 25V | 1005-0013 | Erie | 5835-512-Y5U-103Z |
| C71 | Cer, .01μF, +80-20%, 25V | 1005-0013 | Erie | 5835-512-Y5U-103Z |
| C72 | Elct, 100μF, ±10%, 25V | 1013-0003 | Sprague | 30D107G025DD5 |
| C73 | Cer, .01μF, +80-20%, 25V | 1005-0013 | Erie | 5835-512-Y5U-103Z |
| C74 | Mica, 91pF, ±5%, 500V | 1002-0027 | Elmenco | DM15-F-910J |
| C75 | Cer, .01μF, +80-20%, 25V | 1005-0013 | Erie | 5835-512-Y5U-103Z |
| C76 | Cer, .01μF, +80-20%, 25V | 1005-0013 | Erie | 5835-512-Y5U-103Z |
| C77 | Cer, .01μF, +80-20%, 25V | 1005-0013 | Erie | 5835-512-Y5U-103Z |
| C78 | Cer, .01μF, +80-20%, 25V | 1005-0013 | Erie | 5835-512-Y5U-103Z |
| C79 | Cer, .01μF, +80-20%, 25V | 1005-0013 | Erie | 5835-512-Y5U-103Z |
| C80 | Cer, .01μF, +80-20%, 25V | 1005-0013 | Erie | 5835-512-Y5U-103Z |
| C81 | Cer, .01μF, +80-20%, 25V | 1005-0013 | Erie | 5835-512-Y5U-103Z |
| C82 | Cer, .05μF, +80-20%, 25V | 1005-0014 | Erie | 5855-505-Y5U0-503Z |
| C83 | Cer, .01μF, +80-20%, 25V | 1005-0013 | Erie | 5835-512-Y5U-103Z |
| C84 | Cer, .01μF, +80-20%, 25V | 1005-0013 | Erie | 5835-512-Y5U-103Z |
| C85 | Cer, .01μF, +80-20%, 25V | 1005-0013 | Erie | 5835-512-Y5U-103Z |
| C86 | Cer, .01μF, +80-20%, 25V | 1005-0013 | Erie | 5835-512-Y5U-103Z |
| C87 | Mica, 270pF, ±5%, 500V | 1002-0031 | Elmenco | DM15-F-271J |
| C88 | Mica, 87pF, ±1%, 500V | 1002-0047 | Elmenco | DM15-E-870F |
| C89 | Cer, .01μF, +80-20%, 25V | 1005-0013 | Erie | 5835-512-Y5U-103Z |
| C90 | Cer, .01μF, +80-20%, 25V | 1005-0013 | Erie | 5835-512-Y5U-103Z |
| C91 | Cer, .01μF, +80-20%, 25V | 1005-0013 | Erie | 5835-512-Y5U-103Z |
| C92 | Poly, .039μF, ±10%, 100V | 1008-0045 | Sprague | 225P39391WA3 |
| C93 | Poly, .0022μF, ±10%, 100V | 1008-0020 | Sprague | 225P22291WA3 |
| C94 | Poly, .0022μF, ±10%, 100V | 1008-0020 | Sprague | 225P22291WA3 |
| C95 | Cer, .01μF, +80-20%, 25V | 1005-0013 | Erie | 5835-512-Y5U-103Z |
| C96 | Poly, .047μF, ±10%, 100V | 1008-0049 | Sprague | 225P47391WA3 |
| C97 | Poly, .012μF, ±10%, 200V | 1008-0040 | Sprague | 22512391WA3 |
| C98 | Poly, .022μF, ±10%, 100V | 1008-0034 | Sprague | 225P22391WA3 |
| C99 | Poly, .01μF, ±10%, 200V | 1008-0043 | Sprague | 225P10392XA3 |
| C100 | Cer, .01μF, +80-20%, 25V | 1005-0013 | Erie | 5835-512-Y5U-103Z |
| C101 | Cer, .01μF, +80-20%, 25V | 1005-0013 | Erie | 5835-512-Y5U-103Z |
| C102 | Cer, .01μF, +80-20%, 25V | 1005-0013 | Erie | 5835-512-Y5U-103Z |
| C103 | Cer, .01μF, +80-20%, 25V | 1005-0013 | Erie | 5835-512-Y5U-103Z |
| C104 | Cer, .01μF, +80-20%, 25V | 1005-0013 | Erie | 5835-512-Y5U-103Z |
| C105 | Cer, .01μF, +80-20%, 25V | 1005-0013 | Erie | 5835-512-Y5U-103Z |

SECOND I. F. & MIXER, 4300 (cont.)

| CKT. REF. | DESCRIPTION | CE STOCK NO. | MFR. | MFR. NO. |
|---|---|---|---|---|
| C106 | Cer, 3.3pF, +.25pF, 500V | 1005-0011 | Erie | 301-000-C0J0-339C |
| C107 | Cer, .01μF, +80-20%, 25V | 1005-0013 | Erie | 5835-512-Y5U-103Z |
| C108 | Cer, 3.3pF, ±.25pF, 500V | 1005-0011 | Erie | 301-000-C0J0-339C |
| C109 | Cer, .01μF, +80-20%, 25V | 1005-0013 | Erie | 5835-512-Y5U-103Z |
| C110 | Cer, .01μF, +80-20%, 25V | 1005-0013 | Erie | 5835-512-Y5U-103Z |
| C111 | Cer, .05μF, +80-20%, 25V | 1005-0014 | Erie | 5855-505-Y5U0-503Z |
| | DIODES | | | |
| CR1 | Si, Dual Varicap, 40pF, 32V | 1281-0058 | Motorola | MV104 |
| CR2 | Si, Signal, 75 PIV, 1N3064 | 1281-0013 | Teledyne | 1N3064 |
| CR3 | Si, Signal, 75 PIV, 1N3064 | 1281-0013 | Teledyne | 1N3064 |
| CR4 | Si, Signal, 75 PIV, 1N3064 | 1281-0013 | Teledyne | 1N3064 |
| CR5 | Si, Signal, 75 PIV, 1N3064 | 1281-0013 | Teledyne | 1N3064 |
| CR6 | Si, Signal, 75 PIV, 1N3064 | 1281-0013 | Teledyne | 1N3064 |
| CR7 | Si, Signal, 75 PIV, 1N3064 | 1281-0013 | Teledyne | 1N3064 |
| CR8 | Si, Signal, 75 PIV, 1N3064 | 1281-0013 | Teledyne | 1N3064 |
| CR9 | Si, Signal, 75 PIV, 1N3064 | 1281-0013 | Teledyne | 1N3064 |
| CR10 | Si, Signal, 75 PIV, 1N3064 | 1281-0013 | Teledyne | 1N3064 |
| CR11 | Si, Signal, 75 PIV, 1N3064 | 1281-0013 | Teledyne | 1N3064 |
| CR12 | Si, Signal, 75 PIV, 1N3064 | 1281-0013 | Teledyne | 1N3064 |
| CR13 | Si, Signal, 75 PIV, 1N3064 | 1281-0013 | Teledyne | 1N3064 |
| | CONNECTORS | | | |
| J1 | SMB, 50 Ohm, Rtang, JK, PC MT, Snap-On | 2536-0060 | Cablewave | 700214NP |
| J2 | SMB, 50 Ohm, Rtang JK, PC MT, Snap-On | 2536-0060 | Cablewave | 700214NP |
| | INDUCTORS | | | |
| L1 | RF, Choke, 100μH, ±5% | 1585-0017 | Delevan | 1537-76 |
| L2 | Coil, Variable, 1-2.5μH | 1596-0067 | Cushman | |
| L3 | Not Used | | | |
| L4 | RF, Choke, 1000μH, ±5% | 1585-0020 | Delevan | 2500-28 |
| L5 | RF, Choke, 68μH, ±5% | 1585-0059 | Delevan | 1537-68 |
| L6 | RF, Choke, 4.7μH, ±10% | 1585-0021 | Delevan | 1537-28 |
| L7 | RF, Choke, 4.7μH, ±10% | 1585-0021 | Delevan | 1537-28 |
| L8 | RF, Choke, 2.2μH, ±10% | 1585-0013 | Delevan | 1537-20 |
| L9 | RF, Choke, 1000μH, ±5% | 1585-0020 | Delevan | 2500-28 |
| L10 | RF, Choke, 1000μH, ±5% | 1585-0020 | Delevan | 2500-28 |
| L11 | RF, Choke, 2.2μH, ±10% | 1585-0013 | Delevan | 1537-20 |
| L12 | Coil-Variable, 2.2-5.1μH | 1596-0104 | Cushman | |
| L13 | RF, Choke, 1000μH, ±5% | 1585-0020 | Delevan | 2500-28 |
| L14 | RF, Choke, 100μH, ±5% | 1585-0017 | Delevan | 1537-76 |
| L15 | RF, Choke, 82μH | 1585-0032 | Delevan | 1537-72 |
| L16 | RF, Choke, 1000μH, ±5% | 1585-0020 | Delevan | 2500-28 |
| | TRANSISTORS | | | |
| Q1 | Si, NPN, 2N4275 | 1272-0016 | Fairchild | 2N4275 |
| Q2 | Si, NPN, 2N5962 | 1272-0059 | Fairchild | 2N4275 |
| Q3 | Si, NPN, 2N3565 | 1272-0017 | Fairchild | 2N3565 |
| Q4 | Si, NPN, 2N3565 | 1272-0017 | Fairchild | 2N3565 |
| Q5 | Si, NPN, 2N5179 | 1272-0067 | Fairchild | 2N5179 |
| Q6 | Si, NPN, 2N3904 | 1272-0032 | Fairchild | 2N3904 |
| Q7 | Si, NPN, 2N3563 | 1272-0022 | Fairchild | 2N3563 |
| Q8 | Si, NPN, 2N4275 | 1272-0016 | Fairchild | 2N4275 |
| Q9 | Si, NPN, 2N4275 | 1272-0016 | Fairchild | 2N4275 |
| Q10 | Si, NPN, 2N4275 | 1272-0016 | Fairchild | 2N4275 |

SECOND I. F. & MIXER, 4300 (cont.)

| CKT. REF. | DESCRIPTION | CE STOCK NO. | MFR. | MFR. NO. |
|---|---|---|---|---|
| Q11 | Si, NPN, 2N3563 | 1272-0022 | Fairchild | 2N3563 |
| Q12 | Si, NPN, 2N3904 | 1272-0032 | Fairchild | 2N3904 |
| Q13 | Si, NPN, 2N3904 | 1272-0032 | Fairchild | 2N3904 |
| Q14 | Si, NPN, 2N3904 | 1272-0032 | Fairchild | 2N3904 |
| Q15 | Si, NPN, 2N3904 | 1272-0032 | Fairchild | 2N3904 |
| Q16 | Si, PNP, 2N4121 | 1272-0023 | Fairchild | 2N4121 |
| Q17 | Si, PNP, 2N4121 | 1272-0023 | Fairchild | 2N4121 |
| Q18 | Si, NPN, 2N3904 | 1272-0032 | Fairchild | 2N3904 |
| Q19 | Si, NPN, 2N3904 | 1272-0032 | Fairchild | 2N3904 |
| Q20 | Si, NPN, 2N3565 | 1272-0017 | Fairchild | 2N3565 |
| Q21 | Si, NPN, 2N3904 | 1272-0032 | Fairchild | 2N3904 |
| Q22 | Si, PNP, 2N4121 | 1272-0023 | Fairchild | 2N4121 |
| Q23 | Si, NPN, 2N3904 | 1272-0032 | Fairchild | 2N3904 |
| Q24 | Si, NPN, 2N3565 | 1272-0017 | Fairchild | 2N3565 |
| Q25 | Si, NPN, 2N3904 | 1272-0032 | Fairchild | 2N3904 |
| | RESISTORS | | | |
| R1 | Comp, 1K, ±5%, 1/4W | 1066-1025 | Allen-Bradley | CB1025 |
| R2 | Comp, 1K, ±5%, 1/4W | 1066-1025 | Allen-Bradley | CB1025 |
| R3 | Comp, 10Ω, ±5%, 1/4W | 1066-1005 | Allen-Bradley | CB1005 |
| R4 | Comp, 10Ω, ±5%, 1/4W | 1066-1005 | Allen-Bradley | CB1005 |
| R5 | Comp, 10Ω, ±5%, 1/4W | 1066-1005 | Allen-Bradley | CB1005 |
| R6 | Comp, 10Ω, ±5%, 1/4W | 1066-1005 | Allen-Bradley | CB1005 |
| R7 | Comp, 2.7K, ±5%, 1/4W | 1066-2725 | Allen-Bradley | CB2725 |
| R8 | Comp, 2.7K, ±5%, 1/4W | 1066-2725 | Allen-Bradley | CB2725 |
| R9 | Comp, 2.7K, ±5%, 1/4W | 1066-2725 | Allen-Bradley | CB2725 |
| R10 | Comp, 2.7K, ±5%, 1/4W | 1066-2725 | Allen-Bradley | CB2725 |
| R11 | MF, 1.62K, ±1%, 1/8W, 100PPM | 1075-0070 | Dale | MFF 1/8 |
| R12 | MF, 16.2K, ±1%, 1/8W, 100PPM | 1075-0057 | Dale | MFF 1/8 |
| R13 | MF, 1.78K, ±1%, 1/8W, 100PPM | 1075-0089 | Dale | MFF 1/8 |
| R14 | MF, 1.62K, ±1%, 1/8W, 25PPM | 1075-0070 | Dale | MFF 1/8 |
| R15 | Comp, 680K, ±5%, 1/4W | 1066-6845 | Allen-Bradley | CB6845 |
| R16 | Comp, 220Ω, ±5%, 1/4W | 1066-2215 | Allen-Bradley | CB2215 |
| R17 | MF, 11.3K, ±1%, 1/8W, 100PPM | 1075-0034 | Dale | MFF 1/8 |
| R18 | Comp, 3K, ±5%, 1/4W | 1066-3025 | Allen-Bradley | CB3025 |
| R19 | MF, 5.62K, ±1%, 1/8W, 100PPM | 1075-0013 | Dale | MFF 1/8 |
| R20 | MF, 2.8K, ±1%, 1/8W, 100PPM | 1075-0102 | Dale | MFF 1/8 |
| R21 | MF, 5.62K, ±1%, 1/8W, 100PPM | 1075-0013 | Dale | MFF 1/8 |
| R22 | Comp, 10K, ±5%, 1/4W | 1066-1035 | Allen-Bradley | CB1035 |
| R23 | MF, 1.62K, ±1%, 1/8W, 25PPM | 1075-0070 | Dale | MFF 1/8 |
| R24 | MF, 1.62K, ±1%, 1/8W, 25PPM | 1075-0070 | Dale | MFF 1/8 |
| R25 | Comp, 10K, ±5%, 1/4W | 1066-1035 | Allen-Bradley | CB1035 |
| R26 | MF, 1.21K, ±1%, 1/8W, 100PPM | 1075-0042 | Dale | MFF 1/8 |
| R27 | Comp, 1K, ±5%, 1/4W | 1066-1025 | Allen-Bradley | CB1025 |
| R28 | MF, 1.21K, ±1%, 1/8W, 100PPM | 1075-0042 | Dale | MFF 1/8 |
| R29 | Comp, 10K, ±5%, 1/4W | 1066-1035 | Allen-Bradley | CB1035 |
| R30 | Comp, 10K, ±5%, 1/4W | 1066-1035 | Allen-Bradley | CB1035 |
| R31 | Comp, 1K, ±5%, 1/4W | 1066-1025 | Allen-Bradley | CB1025 |
| R32 | Comp, 15K, ±5%, 1/4W | 1066-1535 | Allen-Bradley | CB1535 |
| R33 | Comp, 4.7K, ±5%, 1/4W | 1066-4725 | Allen-Bradley | CB4725 |
| R34 | Comp, 220Ω, ±5%, 1/4W | 1066-2215 | Allen-Bradley | CB2215 |
| R35 | Comp, 470Ω, ±5%, 1/4W | 1066-4715 | Allen-Bradley | CB4715 |
| R36 | Comp, 1K, ±5%, 1/4W | 1066-1025 | Allen-Bradley | CB1025 |
| R37 | Comp, 1K, ±5%, 1/4W | 1066-1025 | Allen-Bradley | CB1025 |
| R38 | Comp, 10Ω, ±5%, 1/4W | 1066-1005 | Allen-Bradley | CB1005 |
| R39 | Comp, 470Ω, ±5%, 1/4W | 1066-4715 | Allen-Bradley | CB4715 |
| R40 | Comp, 1.5K, ±5%, 1/4W | 1066-1525 | Allen-Bradley | CB1525 |

SECOND I. F. & MIXER , 4300 (cont.)

| CKT. REF. | DESCRIPTION | CE STOCK NO. | MFR. | MFR. NO. |
|---|---|---|---|---|
| R41 | Comp, 330Ω, ±5%, 1/4W | 1066-3315 | Allen-Bradley | CB3315 |
| R42 | Comp, 5.1K, ±5%, 1/4W | 1066-5125 | Allen-Bradley | CB5125 |
| R43 | Comp, 1K, ±5%, 1/4W | 1066-1025 | Allen-Bradley | CB1025 |
| R44 | Comp, 5.1K, ±5%, 1/4W | 1066-5125 | Allen-Bradley | CB5125 |
| R45 | Comp, 1K, ±5%, 1/4W | 1066-1025 | Allen-Bradley | CB1025 |
| R46 | Comp, 1K, ±5%, 1/4W | 1066-1025 | Allen-Bradley | CB1025 |
| R47 | Comp, 24Ω, ±5%, 1/4W | 1066-2405 | Allen-Bradley | CB2405 |
| R48 | Comp, 2K, ±5%, 1/4W | 1066-2025 | Allen-Bradley | CB2025 |
| R49 | Comp, 3K, ±5%, 1/4W | 1066-3025 | Allen-Bradley | CB3025 |
| R50 | Comp, 51Ω, 1/4W | 1066-5105 | Allen-Bradley | CB5105 |
| R51 | Comp, 100Ω, ±5%, 1/4W | 1066-1015 | Allen-Bradley | CB1015 |
| R52 | Pot, 500Ω, 1/2W, 3/8 Sq | 1215-0035 | Beckman | 68PR500 |
| R53 | Comp, 100Ω, ±5%, 1/4W | 1066-1015 | Allen-Bradley | CB1015 |
| R54 | Comp, 750Ω, ±5%, 1/4W | 1066-7515 | Allen-Bradley | CB7515 |
| R55 | Comp, 1K, ±5%, 1/4W | 1066-1025 | Allen-Bradley | CB1025 |
| R56 | Comp, 7.5K, ±5%, 1/4W | 1066-7525 | Allen-Bradley | CB7525 |
| R57 | Comp, 7.5K, ±5%, 1/4W | 1066-7525 | Allen-Bradley | CB7525 |
| R58 | Comp, 100Ω, ±5%, 1/4W | 1066-1015 | Allen-Bradley | CB1015 |
| R59 | Comp, 750Ω, ±5%, 1/4W | 1066-7515 | Allen-Bradley | CB7515 |
| R60 | Comp, 10Ω, ±5%, 1/4W | 1066-1005 | Allen-Bradley | CB1005 |
| R61 | Comp, 100K, ±5%, 1/4W | 1066-1045 | Allen-Bradley | CB1045 |
| R62 | Comp, 10K, ±5%, 1/4W | 1066-1035 | Allen-Bradley | CB1035 |
| R63 | Comp, 1.5K, ±5%, 1/4W | 1066-1525 | Allen-Bradley | CB1525 |
| R64 | Comp, 20K, ±5%, 1/4W | 1066-2035 | Allen-Bradley | CB2035 |
| R65 | Comp, 20K, ±5%, 1/4W | 1066-2035 | Allen-Bradley | Cb2035 |
| R66 | Comp, 10K, ±5%, 1/4W | 1066-1035 | Allen-Bradley | CB1035 |
| R67 | Comp, 10K, ±5%, 1/4W | 1066-1035 | Allen-Bradley | CB1035 |
| R68 | Comp, 220Ω, ±5%, 1/4W | 1066-2215 | Allen-Bradley | CB2215 |
| R69 | Comp, 200Ω, ±5%, 1/4W | 1066-2015 | Allen-Bradley | CB2015 |
| R70 | Comp, 33Ω, ±5%, 1/4W | 1066-3305 | Allen-Bradley | CB3305 |
| R71 | Comp, 2.2K, ±5%, 1/4W | 1066-2225 | Allen-Bradley | CB2225 |
| R72 | Comp, FSV, ±5%, 1/4W | 1066-xxxx | Allen-Bradley | CBxxxx |
| R73 | Comp, FSV, ±5%, 1/4W | 1066-xxxx | Allen-Bradley | CBxxxx |
| R74 | Thms, 100Ω, ±10% | 1253-0004 | Veco | 21E25 |
| R75 | Comp, 7.5K, ±5%, 1/4W | 1066-7525 | Allen-Bradley | CB7525 |
| R76 | Comp, 7.5K, ±5%, 1/4W | 1066-7525 | Allen-Bradley | CB7525 |
| R77 | Comp, 51Ω, 1/4W | 1066-5105 | Allen-Bradley | CB5105 |
| R78 | Comp, 2.2K, ±5%, 1/4W | 1066-2225 | Allen-Bradley | CB2225 |
| R79 | Comp, 430Ω, ±5%, 1/4W | 1066-4315 | Allen-Bradley | CB4315 |
| R80 | Comp, 6.8K, ±5%, 1/4W | 1066-6825 | Allen-Bradley | CB6825 |
| R81 | Comp, 7.5K, ±5%, 1/4W | 1066-7525 | Allen-Bradley | CB7525 |
| R82 | Comp, 7.5K, ±5%, 1/4W | 1066-7525 | Allen-Bradley | CB7525 |
| R83 | Comp, 510Ω, ±5%, 1/4W | 1066-5115 | Allen-Bradley | CB5115 |
| R84 | Comp, 7.5K, ±5%, 1/4W | 1066-7525 | Allen-Bradley | CB7525 |
| R85 | Comp, 7.5K, ±5%, 1/4W | 1066-7525 | Allen-Bradley | CB7525 |
| R86 | Comp, 200Ω, ±5%, 1/4W | 1066-2015 | Allen-Bradley | CB2015 |
| R87 | Trim, 500Ω, ±10%, 3/4W | 1215-0011 | Helitrim | 89WR |
| R88 | Trim, 500Ω, ±10%, 3/4W | 1215-0011 | Helitrim | 89WR |
| R89 | Trim, 500Ω, ±10%, 3/4W | 1215-0011 | Helitrim | 89WR |
| R90 | Comp, 1K, ±5%, 1/4W | 1066-1025 | Allen-Bradley | CB1025 |
| R91 | Comp, 750Ω, ±5% | 1066-7515 | Allen-Bradley | CB7515 |
| R92 | Comp, 100Ω, ±5%, 1/4W | 1066-1015 | Allen-Bradley | CB1015 |
| R93 | Comp, 7.5K, ±5%, 1/4W | 1066-7525 | Allen-Bradley | CB7525 |
| R94 | Comp, 7.5K, ±5%, 1/4W | 1066-7525 | Allen-Bradley | CB7525 |
| R95 | Comp, 1K, ±5%, 1/4W | 1066-1025 | Allen-Bradley | CB1025 |

SECOND I. F. & MIXER, 4300 (cont.)

| CKT. REF. | DESCRIPTION | CE STOCK NO. | MFR. | MFR. NO. |
|---|---|---|---|---|
| R96 | Comp, 7.5K, ±5%, 1/4W | 1066-7525 | Allen-Bradley | CB7525 |
| R97 | Comp, 7.5K, ±5%, 1/4W | 1066-7525 | Allen-Bradley | CB7525 |
| R98 | Comp, 1.2K, ±5%, 1/4W | 1066-1225 | Allen-Bradley | CB1225 |
| R99 | Comp, 1K, ±5%, 1/4W | 1066-1025 | Allen-Bradley | CB1025 |
| R100 | Comp, 430Ω, ±5%, 1/4W | 1066-4315 | Allen-Bradley | CB4315 |
| R101 | Comp, 6.8K, ±5%, 1/4W | 1066-6825 | Allen-Bradley | CB6825 |
| R102 | Comp, 2K, ±5%, 1/4W | 1066-2025 | Allen-Bradley | CB2025 |
| R103 | Comp, 7.5K, ±5%, 1/4W | 1066-7525 | Allen-Bradley | CB7525 |
| R104 | Comp, 20K, ±5%, 1/4W | 1066-2035 | Allen-Bradley | CB2035 |
| R105 | Comp, 7.5K, ±5%, 1/4W | 1066-7525 | Allen-Bradley | CB7525 |
| R106 | Comp, 2K, ±5%, 1/4W | 1066-2025 | Allen-Bradley | CB2025 |
| R107 | Comp, 10Ω, ±5%, 1/4W | 1066-1005 | Allen-Bradley | CB1005 |
| R108 | Comp, 20K, ±5%, 1/4W | 1066-2035 | Allen-Bradley | CB2035 |
| R109 | Comp, 100K, ±5%, 1/4W | 1066-1045 | Allen-Bradley | CB1045 |
| R110 | Comp, 7.5K, ±5%, 1/4W | 1066-7525 | Allen-Bradley | CB7525 |
| R111 | Comp, 7.5K, ±5%, 1/4W | 1066-7525 | Allen-Bradley | CB7525 |
| R112 | Comp, 2.2K, ±5%, 1/4W | 1066-2225 | Allen-Bradley | CB2225 |
| R113 | Comp, 51Ω, 1/4W | 1066-5105 | Allen-Bradley | CB5105 |
| R114 | Comp, 430Ω, ±5%, 1/4W | 1066-4315 | Allen-Bradley | CB4315 |
| R115 | Comp, 6.8K, ±5%, 1/4W | 1066-6825 | Allen-Bradley | CB6825 |
| R116 | Comp, 7.5K, ±5%, 1/4W | 1066-7525 | Allen-Bradley | CB7525 |
| R117 | Comp, 20K, ±5%, 1/4W | 1066-2035 | Allen-Bradley | CB2035 |
| R118 | Comp, 2K, ±5%, 1/4W | 1066-2025 | Allen-Bradley | CB2025 |
| R119 | Comp, 7.5K, ±5%, 1/4W | 1066-7525 | Allen-Bradley | CB7525 |
| R120 | Comp, 20K, ±5%, 1/4W | 1066-2035 | Allen-Bradley | CB2035 |
| | TRANSFORMERS | | | |
| T1 | Trifiliar | 1579-0017 | Cushman | |
| T2 | Trifiliar | 1579-0017 | Cushman | |
| T3 | Trifiliar | 1579-0017 | Cushman | |
| T4 | Trifiliar | 1579-0017 | Cushman | |
| T5 | Trifiliar | 1579-0017 | Cushman | |
| | INTEGRATED CIRCUITS | | | |
| U1 | IC, MC7805CP, 5 Volt Pos Rgltr | 2025-0088 | Motorola | MC7805CP |
| U2 | IC, SN7400N Quad 2-Input NAND Gates | 2025-0003 | Fairchild | F7400PC |
| U3 | IC, SN7490N, Decade Divider | 2025-0002 | Fairchild | F7490PC |
| U4 | IC, SN7492N, Divider | 2025-0056 | T.I. | SN7492N |
| U5 | IC, MC4044P, Phase Detector | 2025-0066 | Motorola | MC4044P |
| U6 | IC, SN72741P, High Perf OP Amp | 2025-0067 | Fairchild | 741TC |
| | CRYSTALS | | | |
| Y1 | Xtal, 10.7 MHz 3 dB BW 2.3 kHz | 1040-0037 | Cushman | |
| Y2 | Xtal, 10.7 MHz 3 dB BW 3.1 kHz | 1040-0034 | Cushman | |

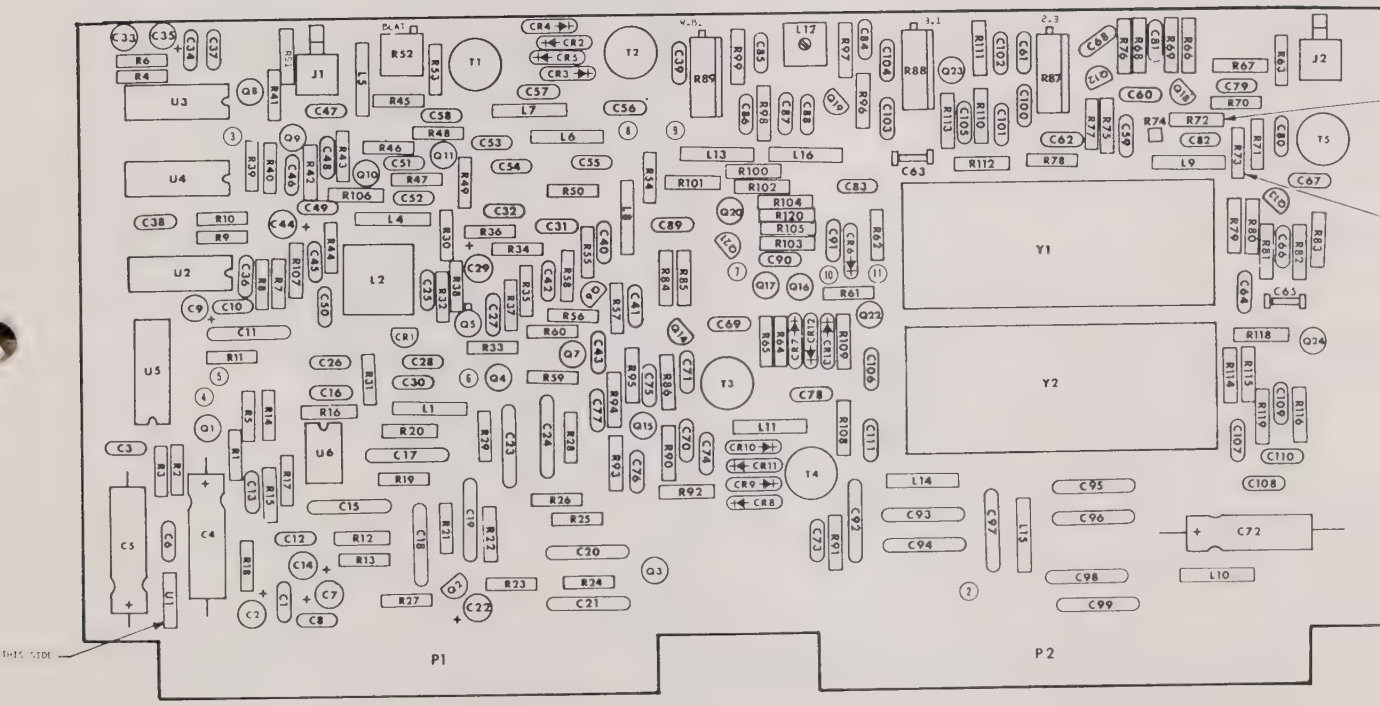
P1
P2
THIS SIDE

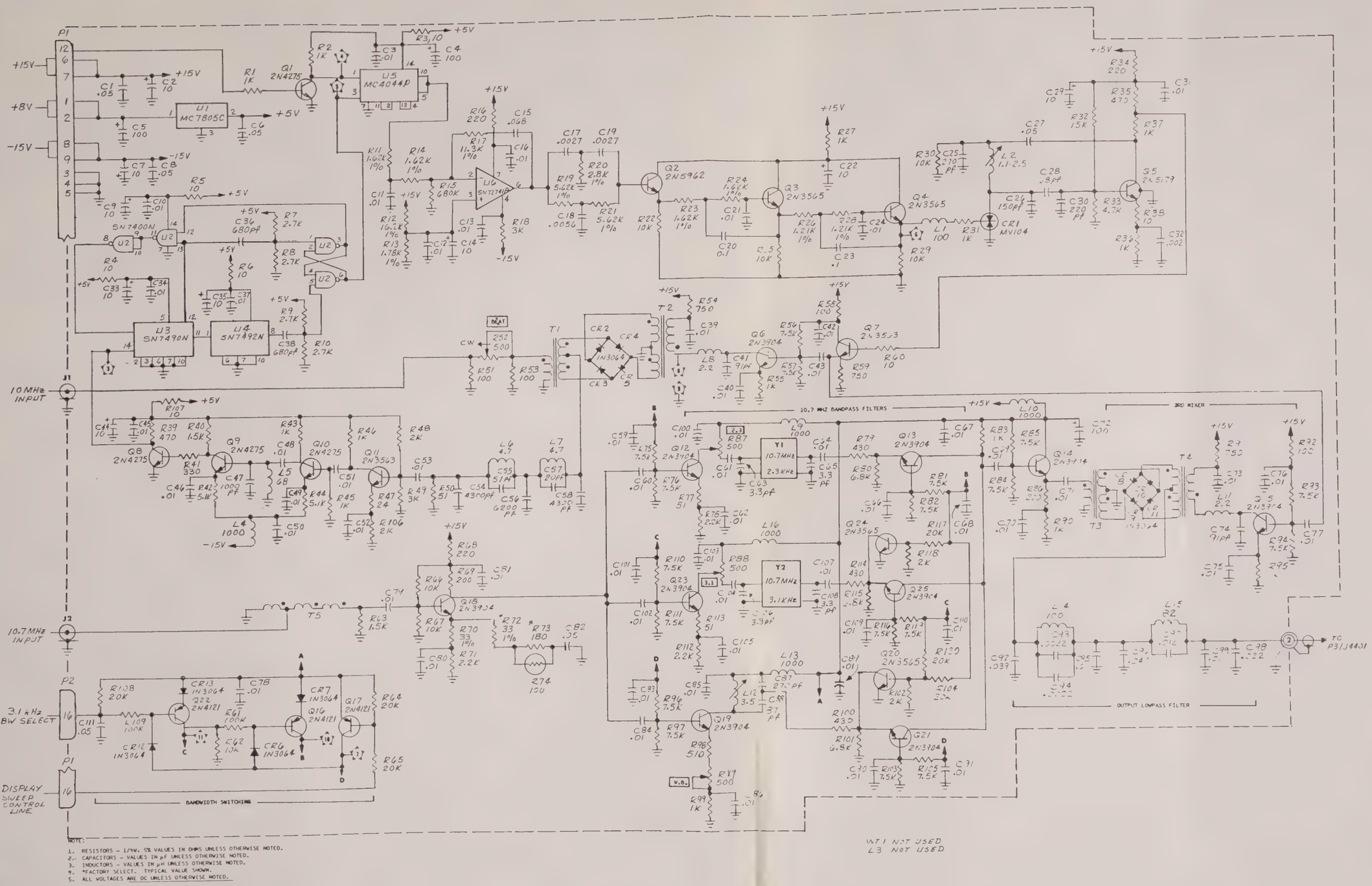


NOTE:
1. RESISTORS - 1/4W, 5% VALUES IN OHMS UNLESS OTHERWISE NOTED.
2. CAPACITORS - VALUES IN μF UNLESS OTHERWISE NOTED.
3. INDUCTORS - VALUES IN μH UNLESS OTHERWISE NOTED.
4. *FACTORY SELECT. TYPICAL VALUE SHOWN.
5. ALL VOLTAGES ARE DC UNLESS OTHERWISE NOTED.

5601-0063-3

Figure 28. Second I. F. & Mixer, 4300
3-107/3-108

PROGRAMMABLE I. F., 4400

| CKT. REF. | DESCRIPTION | CE STOCK NO. | MFR. | MFR. NO. |
|---|---|---|---|---|
| 4400 | Programmable IF PCB Assy | 7001-0295 | Cushman | |
| | P.C. Board | 1780-0551 | Cushman | |
| | CAPACITORS | | | |
| C1 | Cer, .05μF, +80-20%, 25V | 1005-0014 | Erie | 5855-505-Y5U0-503Z |
| C2 | Cer, .05μF, +80-20%, 25V | 1005-0014 | Erie | 5855-505-Y5U0-503Z |
| C3 | Tant, 10μF, +50-20%, 35V | 1011-0006 | ITT | TAG-10/35-20 |
| C4 | Tant, 10μF, +50-20%, 35V | 1011-0006 | ITT | TAG-10/35-20 |
| C5 | Mica, 430pF, ±5%, 500V | 1002-0034 | Elmenco | DM15-F-431J |
| C6 | Mica, 1500pF, ±5%, 500V | 1002-0083 | Elmenco | DM19-E-152J |
| C7 | Mica, 1500pF, ±5%, 500V | 1002-0083 | Elmenco | DM19-E-152J |
| C8 | Cer, .05μF, +80-20%, 25V | 1005-0014 | Erie | 5855-505-Y5U0-503Z |
| C9 | Cer, .05μF, +80-20%, 25V | 1005-0014 | Erie | 5855-505-Y5U0-503Z |
| C10 | Cer, .05μF, +80-20%, 25V | 1005-0014 | Erie | 5855-505-Y5U0-503Z |
| C11 | Tant, 10μF, +50-20%, 35V | 1011-0006 | ITT | TAG-10/35-20 |
| C12 | Cer, .05μF, +80-20%, 25V | 1005-0014 | Erie | 5855-505-Y5U0-503Z |
| C13 | Cer, .05μF, +80-20%, 25V | 1005-0014 | Erie | 5855-505-Y5U0-503Z |
| C14 | Tant, 10μF, +50-20%, 35V | 1011-0006 | ITT | TAG-10/35-20 |
| C15 | Tant, 10μF, +50-20%, 35V | 1011-0006 | ITT | TAG-10/35-20 |
| C16 | Cer, .05μF, +80-20%, 25V | 1005-0014 | Erie | 5855-505-Y5U0-503Z |
| C17 | Cer, .05μF, +80-20%, 25V | 1005-0014 | Erie | 5855-505-Y5U0-503Z |
| C18 | Tant, 10μF, +50-20%, 35V | 1011-0006 | ITT | TAG-10/35-20 |
| C19 | Cer, .05μF, +80-20%, 25V | 1005-0014 | Erie | 5855-505-Y5U0-503Z |
| C20 | Cer, .05μF, +80-20%, 25V | 1005-0014 | Erie | 5855-505-Y5U0-503Z |
| C21 | Cer, .05μF, +80-20%, 25V | 1005-0014 | Erie | 5855-505-Y5U0-503Z |
| C22 | Cer, .05μF, +80-20%, 25V | 1005-0014 | Erie | 5855-505-Y5U0-503Z |
| C23 | Tant, 10μF, +50-20%, 35V | 1011-0006 | ITT | TAG-10/35-20 |
| C24 | Cer, .05μF, +80-20%, 25V | 1005-0014 | Erie | 5855-505-Y5U0-503Z |
| C25 | Cer, .05μF, +80-20%, 25V | 1005-0014 | Erie | 5855-505-Y5U0-503Z |
| C26 | Cer, .05μF, +80-20%, 25V | 1005-0014 | Erie | 5855-505-Y5U0-503Z |
| C27 | Not Used | | | |
| C28 | Cer, .05μF, +80-20%, 25V | 1005-0014 | Erie | 5855-505-Y5U0-503Z |
| C29 | Mica, 1800pF, ±5%, 500V | 1002-0073 | Elmenco | DM19-F-182J |
| C30 | Mica, 1800pF, ±5%, 500V | 1002-0073 | Elmenco | DM19-F-182J |
| C31 | Mica, 270pF, ±5%, 500V | 1002-0031 | Elmenco | DM15-F-271J |
| C32 | Tant, 1μF, ±20%, 50V | 1011-0013 | Kemet | T368A105M050AS |
| C33 | Cer, .05μF, +80-20%, 25V | 1005-0014 | Erie | 5855-505-Y5U0-503Z |
| C34 | Tant, 1μF, ±20%, 50V | 1011-0013 | Kemet | T368A105M050AS |
| C35 | Cer, 1.5pF, ±.25pF, 500V | 1005-0041 | Erie | 301-000-C0K0-159C |
| C36 | Tant, 10μF, +50-20%, 35V | 1011-0006 | ITT | TAG-10/35-20 |
| C37 | Tant, 10μF, +50-20%, 35V | 1011-0006 | ITT | TAG-10/35-20 |
| C38 | Cer, .05μF, +80-20%, 25V | 1005-0014 | Erie | 5855-505-Y5U0-503Z |
| C39 | Myl, .22μF, ±10%, 100V | 1008-0091 | Electrocube | 232A1B224K |
| C40 | Tant, 10μF, ±50-20%, 35V | 1011-0006 | ITT | TAG-10/35-20 |
| C41 | Tant, 10μF, ±50-20%, 35V | 1011-0006 | ITT | TAG-10/35-20 |
| C42 | Cer, .05μF, +80-20%, 25V | 1005-0014 | Erie | 5855-505-Y5U0-503Z |
| C43 | Tant, 1μF, ±20%, 50V | 1011-0013 | Kemet | T368A105M050AS |
| C44 | Cer, 1.5pF, ±.25pF, 500V | 1005-0041 | Erie | 301-000-C0K0-159C |
| C45 | Tant, 10μF, +50-20%, 35V | 1011-0006 | ITT | TAG-10/35-20 |
| C46 | Tant, 10μF, +50-20%, 35V | 1011-0006 | ITT | TAG-10/35-20 |
| C47 | Cer, .05μF, +80-20%, 25V | 1005-0014 | Erie | 5855-505-Y5U0-503Z |
| C48 | Myl, .22μF, ±10%, 100V | 1008-0091 | Electrocube | 232A1B224K |
| C49 | Tant, 10μF, +50-20%, 35V | 1011-0006 | ITT | TAG-10/35-20 |
| C50 | Tant, 10μF, +50-20%, 35V | 1011-0006 | ITT | TAG-10/35-20 |

PROGRAMMABLE I.F., 4400 (cont.)

| CKT. REF. | DESCRIPTION | CE STOCK NO. | MFR. | MFR. NO. |
|---|---|---|---|---|
| C51 | Cer, .05μF, +80-20%, 25V | 1005-0014 | Erie | 5855-505-Y5U0-503Z |
| C52 | Cer, .05μF, +80-20%, 25V | 1005-0014 | Erie | 5855-505-Y5U0-503Z |
| C53 | Cer, .05μF, +80-20%, 25V | 1005-0014 | Erie | 5855-505-Y5U0-503Z |
| C54 | Cer, .05μF, +80-20%, 25V | 1005-0014 | Erie | 5855-505-Y5U0-503Z |
| C55 | Cer, .01μF, +80-20%, 25V | 1005-0013 | Erie | 5855-505-Y5U-103Z |
| C56 | Cer, .05μF, +80-20%, 25V | 1005-0014 | Erie | 5855-505-Y5U0-503Z |
| C57 | Cer, .05μF, +80-20%, 25V | 1005-0014 | Erie | 5855-505-Y5U0-503Z |
| C58 | Cer, .05μF, +80-20%, 25V | 1005-0014 | Erie | 5855-505-Y5U0-503Z |
| C59 | Cer, .05μF, +80-20%, 25V | 1005-0014 | Erie | 5855-505-Y5U0-503Z |
| | DIODES | | | |
| CR1 | Si, Signal, 1N3064, 75 PIV | 1281-0013 | Teledyne | 1N3064 |
| | INDUCTORS | | | |
| L1 | Xmfr, Var, if | 1596-0003 | Cushman | |
| L2 | Coil, Var | 1596-0215 | Cushman | |
| L3 | RF, Choke, 2200μH, ±5% | 1585-0030 | Delevan | 2500-44 |
| L4 | Coil, Var | 1596-0215 | Cushman | |
| L5 | Coil, Var | 1596-0215 | Cushman | |
| L6 | RF, Choke, 4700μH, ±5% | 1585-0006 | Delevan | 2500-60 |
| | TRANSISTORS | | | |
| Q1 | Si, NPN, 2N3565 | 1272-0017 | Fairchild | 2N3565 |
| Q2 | Si, NPN, 2N3565 | 1272-0017 | Fairchild | 2N3565 |
| Q3 | Si, NPN, 2N3565 | 1272-0017 | Fairchild | 2N3565 |
| Q4 | Si, NPN, 2N3565 | 1272-0017 | Fairchild | 2N3565 |
| Q5 | Si, NPN, 2N3565 | 1272-0017 | Fairchild | 2N3565 |
| Q6 | Si, NPN, 2N3565 | 1272-0017 | Fairchild | 2N3565 |
| Q7 | Si, NPN, 2N3565 | 1272-0017 | Fairchild | 2N3565 |
| Q8 | Si, NPN, 2N5962 | 1272-0059 | Fairchild | 2N5962 |
| Q9 | Si, PNP, 2N4121 | 1272-0023 | Fairchild | 2N4121 |
| Q10 | Si, NPN, 2N3904 | 1272-0032 | Motorola | 2N3904 |
| Q11 | Si, NPN, 2N5962 | 1272-0059 | Fairchild | 2N5962 |
| Q12 | Si, PNP, 2N4121 | 1272-0023 | Fairchild | 2N4121 |
| Q13 | Si, NPN, 2N3904 | 1272-0032 | Motorola | 2N3904 |
| Q14 | Si, NPN, 2N3565 | 1272-0017 | Fairchild | 2N3565 |
| Q15 | Si, NPN, 2N3565 | 1272-0017 | Fairchild | 2N3565 |
| Q16 | Si, NPN, 2N3565 | 1272-0017 | Fairchild | 2N3565 |
| Q17 | Si, PNP, 2N4121 | 1272-0023 | Fairchild | 2N4121 |
| Q18 | Si, PNP, 2N4121 | 1272-0023 | Fairchild | 2N4121 |
| Q19 | Si, NPN, 2N3565 | 1272-0017 | Fairchild | 2N3565 |
| Q20 | Si, NPN, 2N3565 | 1272-0017 | Fairchild | 2N3565 |
| Q21 | Si, NPN, 2N3565 | 1272-0017 | Fairchild | 2N3565 |
| Q22 | Si, NPN, 2N3565 | 1272-0017 | Fairchild | 2N3565 |
| Q23 | Si, NPN, 2N3565 | 1272-0017 | Fairchild | 2N3565 |
| Q24 | Si, NPN, 2N3565 | 1272-0017 | Fairchild | 2N3565 |
| Q25 | Si, NPN, 2N3565 | 1272-0017 | Fairchild | 2N3565 |
| Q26 | Si, NPN, 2N3565 | 1272-0017 | Fairchild | 2N3565 |
| | RESISTORS | | | |
| R1 | Comp, 39K, ±5%, 1/4W | 1066-3935 | Allen-Bradley | CB3935 |
| R2 | Comp, 39K, ±5%, 1/4W | 1066-3935 | Allen-Bradley | CB3935 |
| R3 | Comp, 39K, ±5%, 1/4W | 1066-3935 | Allen-Bradley | CB3935 |
| R4 | Comp, 39K, ±5%, 1/4W | 1066-3935 | Allen-Bradley | CB3935 |
| R5 | Comp, 100Ω, ±5%, 1/4W | 1066-1015 | Allen-Bradley | CB1015 |

PROGRAMMABLE I. F., 4400 (cont.)

| CKT. REF. | DESCRIPTION | CE STOCK NO. | MFR. | MFR. NO. |
|---|---|---|---|---|
| R6 | Pot, 500Ω, ±10%, 3/4W | 1215-0011 | Helitrim | 89 WR |
| R7 | Comp, 270Ω, ±5%, 1/4W | 1066-2715 | Allen-Bradley | CB2715 |
| R8 | Comp, 270Ω, ±5%, 1/4W | 1066-2715 | Allen-Bradley | CB2715 |
| R9 | Comp, 1.2K, ±5%, 1/4W | 1066-1225 | Allen-Bradley | CB1225 |
| R10 | Comp, 1K, ±5%, 1/4W | 1066-1025 | Allen-Bradley | CB1025 |
| R11 | Comp, 100Ω, ±5%, 1/4W | 1066-1015 | Allen-Bradley | CB1015 |
| R12 | Pot, 500Ω, ±10%, 3/4W | 1215-0011 | Helitrim | 89 WR |
| R13 | Comp, 1K, ±5%, 1/4W | 1066-1025 | Allen-Bradley | CB1025 |
| R14 | Comp, 560Ω, ±5%, 1/4W | 1066-5615 | Allen-Bradley | CB5615 |
| R15 | Comp, 560Ω, ±5%, 1/4W | 1066-5615 | Allen-Bradley | CB5615 |
| R16 | Comp, 6.8K, ±5%, 1/4W | 1066-6825 | Allen-Bradley | CB6825 |
| R17 | Comp, 6.8K, ±5%, 1/4W | 1066-6825 | Allen-Bradley | CB6825 |
| R18 | Comp, 20K, ±5%, 1/4W | 1066-2035 | Allen-Bradley | CB2035 |
| R19 | Comp, 20K, ±5%, 1/4W | 1066-2035 | Allen-Bradley | CB2035 |
| R20 | Comp, 20K, ±5%, 1/4W | 1066-2035 | Allen-Bradley | CB2035 |
| R21 | Comp, 2K, ±5%, 1/4W | 1066-2025 | Allen-Bradley | CB2025 |
| R22 | Comp, 20K, ±5%, 1/4W | 1066-2035 | Allen-Bradley | CB2035 |
| R23 | Comp, 39K, ±5%, 1/4W | 1066-3935 | Allen-Bradley | CB3935 |
| R24 | Comp, 39K, ±5%, 1/4W | 1066-3935 | Allen-Bradley | CB3935 |
| R25 | Comp, 1K, ±5%, 1/4W | 1066-1025 | Allen-Bradley | CB1025 |
| R26 | Not Used | | | |
| R27 | Not Used | | | |
| R28 | Comp, 9.1K, ±5%, 1/4W | 1066-9125 | Allen-Bradley | CB9125 |
| R29 | Comp, 2.2K, ±5%, 1/4W | 1066-2225 | Allen-Bradley | CB2225 |
| R30 | Comp, 1.5K, ±5%, 1/4W | 1066-1525 | Allen-Bradley | CB1525 |
| R31 | Comp, 18K, ±5%, 1/4W | 1066-1835 | Allen-Bradley | CB1835 |
| R32 | Comp, 18K, ±5%, 1/4W | 1066-1835 | Allen-Bradley | CB1835 |
| R33 | Comp, 6.8K, ±5%, 1/4W | 1066-6825 | Allen-Bradley | CB6825 |
| R34 | Comp, 1K, ±5%, 1/4W | 1066-1025 | Allen-Bradley | CB1025 |
| R35 | Comp, 51K, ±5%, 1/4W | 1066-5135 | Allen-Bradley | CB5135 |
| R36 | Comp, 24K, ±5%, 1/4W | 1066-2435 | Allen-Bradley | CB2435 |
| R37 | Comp, 5.6K, ±5%, 1/4W | 1066-5625 | Allen-Bradley | CB5625 |
| R38 | MF, 3.01K, ±1%, 1/8W, 100PPM | 1075-0127 | Dale | MFF 1/8 |
| R39 | Comp, 1.6K, ±5%, 1/4W | 1066-1625 | Allen-Bradley | CB1625 |
| R40 | MF, 3.01K, ±1%, 1/8W, 100PPM | 1075-0127 | Dale | MFF 1/8 |
| R41 | Comp, 5.1K, ±5%, 1/4W | 1066-5125 | Allen-Bradley | CB5125 |
| R42 | Comp, 100Ω, ±5%, 1/4W | 1066-1015 | Allen-Bradley | CB1015 |
| R43 | Comp, 220Ω, ±5%, 1/4W | 1066-2215 | Allen-Bradley | CB2215 |
| R44 | Pot, 500Ω, ±10%, 3/4W | 1215-0011 | Helitrim | 89 WR |
| R45 | MF, 2.61K, ±1%, 1/8W, 100PPM | 1075-0090 | Dale | MFF 1/8 |
| R46 | Comp, 20K, ±5%, 1/4W | 1066-2035 | Allen-Bradley | CB2035 |
| R47 | Comp, 1K, ±5%, 1/4W | 1066-1025 | Allen-Bradley | CB1025 |
| R48 | Comp, 1K, ±5%, 1/4W | 1066-1025 | Allen-Bradley | CB1025 |
| R49 | Comp, 2K, ±5%, 1/4W | 1066-2025 | Allen-Bradley | CB2025 |
| R50 | Comp, 100Ω, ±5%, 1/4W | 1066-1015 | Allen-Bradley | CB1015 |
| R51 | Comp, 33K, ±5%, 1/4W | 1066-3335 | Allen-Bradley | CB3335 |
| R52 | Comp, 24K, ±5%, 1/4W | 1066-2435 | Allen-Bradley | CB2435 |
| R53 | Comp, 750Ω, ±5%, 1/4W | 1066-7515 | Allen-Bradley | CB7515 |
| R54 | MF, 3.01K, ±1%, 1/8W, 100PPM | 1075-0127 | Dale | MFF 1/8 |
| R55 | MF, 51.1Ω, ±1%, 1/8W, 150PPM | 1075-0077 | Dale | MFF 1/8 |
| R56 | Pot, 100Ω, ±10%, 3/4W | 1215-0010 | Helitrim | 89 WR |
| R57 | Comp, 470Ω, ±5%, 1/4W | 1066-4715 | Allen-Bradley | CB4715 |
| R58 | MF, 3.01K, ±1%, 1/8W, 100PPM | 1075-0127 | Dale | MFF 1/8 |
| R59 | Comp, 5.1K, ±5%, 1/4W | 1066-5125 | Allen-Bradley | CB5125 |
| R60 | MF, 2.61K, ±1%, 1/8W, 100PPM | 1075-0090 | Dale | MFF 1/8 |

PROGRAMMABLE I. F., 4400 (cont.)

| CKT. REF. | DESCRIPTION | CE STOCK NO. | MFR. | MFR. NO. |
|---|---|---|---|---|
| R61 | Comp, 20K, ±5%, 1/4W | 1066-2035 | Allen-Bradley | CB2035 |
| R62 | Comp, 1K, ±5%, 1/4W | 1066-1025 | Allen-Bradley | CB1025 |
| R63 | Comp, 100Ω, ±5%, 1/4W | 1066-1015 | Allen-Bradley | CB1015 |
| R64 | Comp, 160Ω, ±5%, 1/4W | 1066-1615 | Allen-Bradley | CB1615 |
| R65 | Comp, 2K, ±5%, 1/4W | 1066-2025 | Allen-Bradley | CB2025 |
| R66 | Comp, 100Ω, ±5%, 1/4W | 1066-1015 | Allen-Bradley | CB1015 |
| R67 | Comp, 2.4K, ±5%, 1/4W | 1066-2425 | Allen-Bradley | CB2425 |
| R68 | Comp, 750Ω, ±5%, 1/4W | 1066-7515 | Allen-Bradley | CB7515 |
| R69 | Comp, 5.6K, ±5%, 1/4W | 1066-5625 | Allen-Bradley | CB5625 |
| R70 | Comp, 4.7K, ±5%, 1/4W | 1066-4725 | Allen-Bradley | CB4725 |
| R71 | Comp, 10K, ±5%, 1/4W | 1066-1035 | Allen-Bradley | CB1035 |
| R72 | Comp, 10K, ±5%, 1/4W | 1066-1035 | Allen-Bradley | CB1035 |
| R73 | Comp, 20K, ±5%, 1/4W | 1066-2035 | Allen-Bradley | CB2035 |
| R74 | Comp, 20K, ±5%, 1/4W | 1066-2035 | Allen-Bradley | CB2035 |
| R75 | Comp, 20K, ±5%, 1/4W | 1066-2035 | Allen-Bradley | CB2035 |
| R76 | Comp, 100K, ±5%, 1/4W | 1066-1045 | Allen-Bradley | CB1045 |
| R77 | Comp, 10K, ±5%, 1/4W | 1066-1035 | Allen-Bradley | CB1035 |
| R78 | Pot, 10K, ±5%, 1/4W | 1215-0014 | Helitrim | 89 WR |
| R79 | Comp, 39K, ±5%, 1/4W | 1066-3935 | Allen-Bradley | CB3935 |
| R80 | Comp, 1K, ±5%, 1/4W | 1066-1025 | Allen-Bradley | CB1025 |
| R81 | Pot, 100K, ±10%, 3/4W | 1215-0006 | Helitrim | 89 WR |
| R82 | Comp, 39 K, ±5%, 1/4W | 1066-3935 | Allen-Bradley | CB3935 |
| R83 | Comp, 1K, ±5%, 1/4W | 1066-1025 | Allen-Bradley | CB1025 |
| R84 | Pot, 100K, ±10%, 3/4W | 1215-0006 | Helitrim | 89 WR |
| R85 | Comp, 39K, ±5%, 1/4W | 1066-3935 | Allen-Bradley | CB3935 |
| R86 | Comp, 1K, ±5%, 1/4W | 1066-1025 | Allen-Bradley | CB1025 |
| R87 | Comp, 10K, ±5%, 1/4W | 1066-1035 | Allen-Bradley | CB1035 |
| R88 | Comp, 10K, ±5%, 1/4W | 1066-1035 | Allen-Bradley | CB1035 |
| R89 | Comp, 10K, ±5%, 1/4W | 1066-1035 | Allen-Bradley | CB1035 |
| R90 | Comp, 10K, ±5%, 1/4W | 1066-1035 | Allen-Bradley | CB1035 |
| R91 | Comp, 13K, ±5%, 1/4W | 1066-1335 | Allen-Bradley | CB1335 |
| R92 | Comp, 1.2K, ±5%, 1/4W | 1066-1225 | Allen-Bradley | CB1225 |
| R93 | Comp, 20K, ±5%, 1/4W | 1066-2035 | Allen-Bradley | CB2035 |
| | CRYSTAL | | | |
| Y1 | Fltr-Xtal, 80 kHz (3 dB BW 75 Hz) | 1040-0033 | Cushman | |

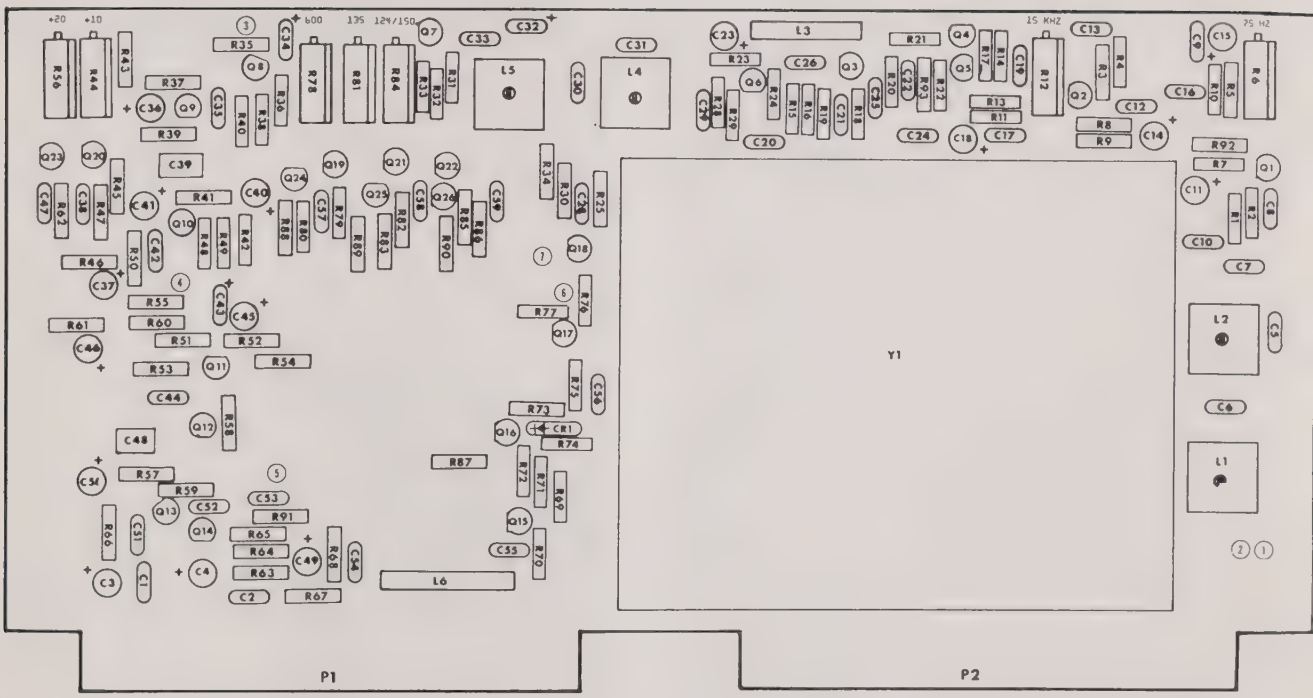
+20
+10
600
135
124/150
15 KHZ
75 HZ
L1
L2
L3
L4
L5
L6
Y1
CR1
P1
P2

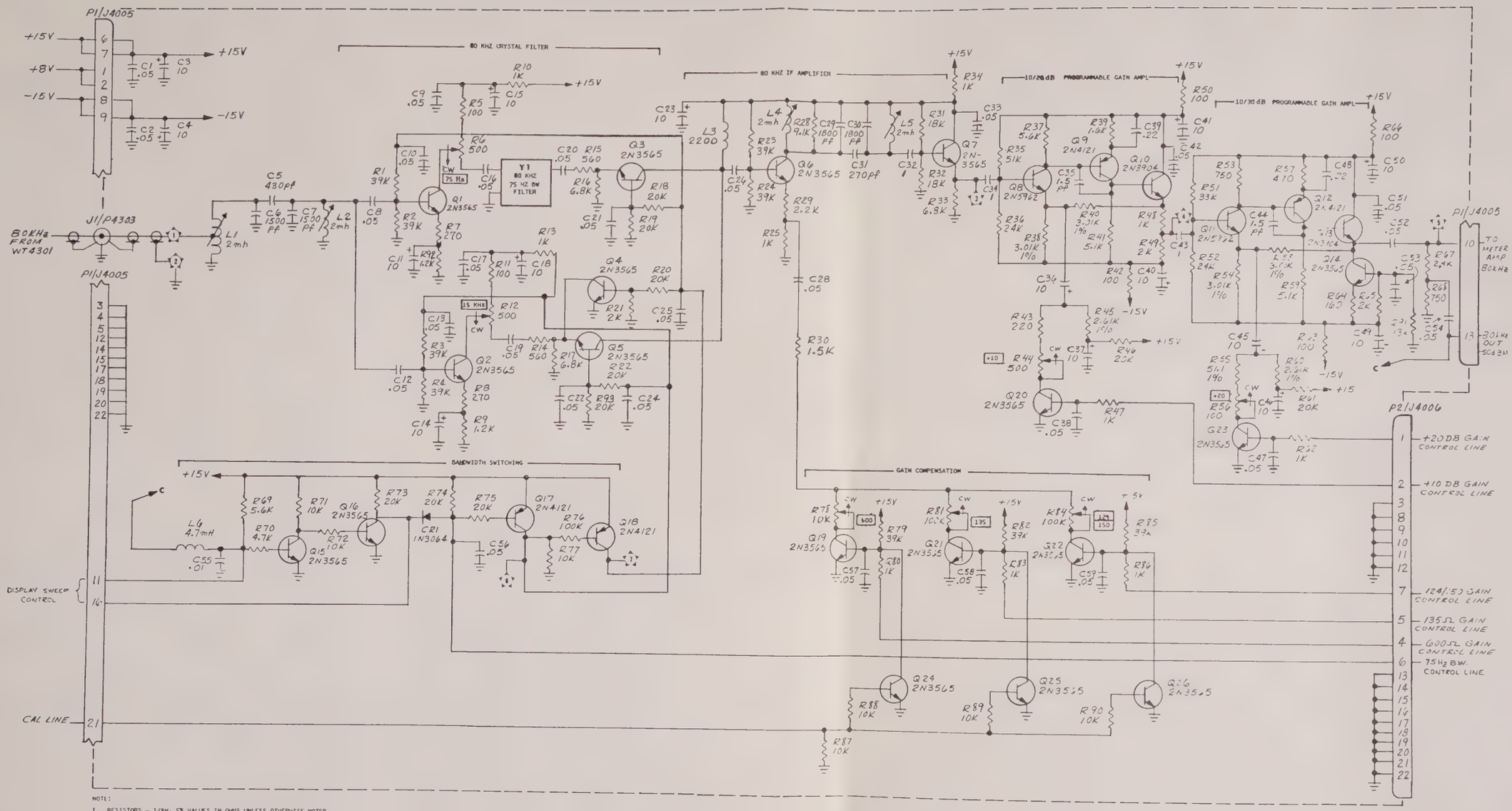


NOTE:
1. RESISTORS - 1/4W, 5% VALUES IN OHMS UNLESS OTHERWISE NOTED.
2. CAPACITORS - VALUES IN μF UNLESS OTHERWISE NOTED.
3. INDUCTORS - VALUES IN μH UNLESS OTHERWISE NOTED.
4. *FACTORY SELECT. TYPICAL VALUE SHOWN.
5. ALL VOLTAGES ARE DC UNLESS OTHERWISE NOTED.

5601**0063**3

Figure 29. Programmable I. F., 4400.

METER/AUDIO AMPLIFIER, 4500

| CKT. REF. | DESCRIPTION | CE STOCK NO. | MFR. | MFR. NO. |
|---|---|---|---|---|
| 4500 | Meter/Audio Amplifier PCB Assy | 7001-0296 | Cushman | |
| | P.C. Board | 1780-0552 | Cushman | |
| | CAPACITORS | | | |
| C1 | Cer, .05μF, +80-20% | 1005-0014 | Erie | 5855-505-Y5U0-503Z |
| C2 | Cer, .05μF, +80-20% | 1005-0014 | Erie | 5855-505-Y5U0-503Z |
| C3 | Tant, 10μF, +50-20%, 35V | 1011-0006 | ITT | TAG-10/35-20 |
| C4 | Poly, .0012μF, ±10%, 100V | 1008-0016 | Sprague | 225P1229WA3 |
| C5 | Tant, 10μF, +50-20%, 35V | 1011-0006 | ITT | TAG-10/35-20 |
| C6 | Tant, 10μF, +50-20%, 35V | 1011-0006 | ITT | TAG-10/35-20 |
| C7 | Cer, .05μF, +80-20% | 1005-0014 | Erie | 5855-505-Y5U0-503Z |
| C8 | Elct, 1μF, ±10%, 25V | 1013-0004 | Sprague | 30D105G025BA5 |
| C9 | Mica, 96pF, ±1%, 500V | 1002-0049 | Elmenco | DM15-F-960F |
| C10 | Mica, 51pF, ±1%, 500V | 1002-0056 | Elmenco | DM15-E-510F |
| C11 | Poly, .027μF, ±10%, 100V | 1008-0032 | Sprague | 225P27391WA3 |
| C12 | Elct, 1μF, ±10%, 25V | 1013-0004 | Sprague | 30D105G035BA5 |
| C13 | Tant, 10μF, +50-20%, 35V | 1011-0006 | ITT | TAG 10/35-20 |
| C14 | Elct, 1μF, ±10%, 25V | 1013-0004 | Sprague | 30D105G035BA5 |
| C15 | Cer, .05μF, +80-20% | 1005-0014 | Erie | 5855-505-Y5U0-503Z |
| C16 | Cer, .05μF, +80-20% | 1005-0014 | Erie | 5855-505-Y5U0-503Z |
| C17 | Tant, 10μF, +50-20%, 35V | 1011-0006 | ITT | TAG-10/35-20 |
| C18 | Elct, 1.5μF, ±10%, 35V | 1013-0001 | Sprague | 150-D-155X-9035-B2 |
| C19 | Tant, 100μF, ±20%, 20V | 1011-0010 | Kemet | T362D107M020AS |
| C20 | Tant, 10μF, +50-20%, 35V | 1011-0006 | ITT | TAG-10/35-20 |
| C21 | Tant, 10μF, +50-20%, 35V | 1011-0006 | ITT | TAG-10/35-20 |
| C22 | Cer, .05μF, +80-20% | 1005-0014 | Erie | 5855-505-Y5U0-503Z |
| C23 | Tant, 100μF, ±20%, 20V | 1011-0010 | Kemet | T362D107M020AS |
| C24 | Poly, .1μF, ±10%, 100V | 1008-0031 | Sprague | 225P10491WA3 |
| C25 | Tant, 10μF, +50-20%, 35V | 1011-0006 | ITT | TAG-10/35-20 |
| C26 | Mica, 200pF, ±5%, 500V | 1002-0042 | Elmenco | DM15-F-201J |
| C27 | Cer, 3.3pF, ±.25pF, 500V | 1005-0011 | Erie | 301-000-C0J0-339C |
| C28 | Mica, 150pF, ±5%, 500V | 1002-0021 | Elmenco | DM15-F-151J |
| C29 | Elct, 1μF, ±10%, 25V | 1013-0004 | Sprague | 30D105G025BA5 |
| C30 | Cer, .05μF, +80-20%, 25V | 1005-0014 | Erie | 5855-505-Y5U0-503Z |
| C31 | Cer, .05μF, +80-20%, 25V | 1005-0014 | Erie | 5855-505-Y5U0-503Z |
| C32 | Cer, .05μF, +80-20%, 25V | 1005-0014 | Erie | 5855-505-Y5U0-503Z |
| C33 | Cer, .05μF, +80-20%, 25V | 1005-0014 | Erie | 5855-505-Y5U0-503Z |
| C34 | Cer, .05μF, +80-20%, 25V | 1005-0014 | Erie | 5855-505-Y5U0-503Z |
| C35 | Tant, 10μF, +50-20%, 35V | 1011-0006 | ITT | TAG-10/35-20 |
| C36 | Tant, 10μF, +50-20%, 35V | 1011-0006 | ITT | TAG-10/35-20 |
| C37 | Tant, 10μF, +50-20%, 35V | 1011-0006 | ITT | TAG-10/35-20 |
| C38 | Elct, 100μF, ±10%, 25V | 1013-0003 | Sprague | 30D107G0250D5 |
| C39 | Elct, 100μF, ±10%, 25V | 1013-0003 | Sprague | 30D107G0250D5 |
| C40 | Elct, 500μF, +75-10%, 25V | 1014-0002 | Illinois | 25T500 |
| C41 | Cer, .05μF, +80-20%, 25V | 1005-0014 | Erie | 5855-505-Y5U0-503Z |
| C42 | Cer, .05μF, +80-20%, 25V | 1005-0014 | Erie | 5855-505-Y5U0-503Z |
| C43 | Cer, .1μF, ±10%, 100V | 1005-0064 | Aerovox | CK05BX104K |
| C44 | Cer, .05μF, +80-20%, 25V | 1005-0014 | Erie | 5855-505-Y5U0-503Z |
| C45 | Tant, 10μF, ±10%, 20V | 1011-0007 | Kemet | K10C20K |
| C46 | Cer, .05μF, +80-20%, 25V | 1005-0014 | Erie | 5855-505-Y5U0-503Z |
| C47 | Cer, .05μF, +80-20%, 25V | 1005-0014 | Erie | 5855-505-Y5U0-503Z |
| C48 | Mica, 100pF, ±5%, 500V | 1002-0011 | Elmenco | DM15-F-101J |
| C49 | Cer, .05μF, +80-20%, 25V | 1005-0014 | Erie | 5855-505-Y5U0-503Z |
| C50 | Cer, .05μF, +80-20%, 25V | 1005-0014 | Erie | 5855-505-Y5U0-503Z |

METER/AUDIO AMPLIFIER, 4500 (cont.)

| CKT. REF. | DESCRIPTION | CE STOCK NO. | MFR. | MFR. NO. |
|---|---|---|---|---|
| C51 | Cer, .05μF, +80-20%, 25V | 1005-0014 | Erie | 5855-505-Y5U0-503Z |
| C52 | Elct, 15μF, +75-10%, 25V | 1013-0005 | Sprague | 30D156G025BB5 |
| C53 | Cer, .05μF, +80-20%, 25V | 1005-0014 | Erie | 5855-505-Y5U0-503Z |
| C54 | Cer, .05μF, +80-20%, 25V | 1005-0014 | Erie | 5855-505-Y5U0-503Z |
| C55 | Tant, 10μF, ±10%, 20V | 1011-0007 | Kemet | K10C20K |
| C56 | Cer, .05μF, +80-20%, 25V | 1005-0014 | Erie | 5855-505-Y5U0-503Z |
| C57 | Mica, 100pF, ±5%, 500V | 1002-0011 | Elmenco | DM15-F-101J |
| C58 | Cer, .05μF, +80-20%, 25V | 1005-0014 | Erie | 5855-505-Y5U0-503Z |
| C59 | Cer, .05μF, +80-20%, 25V | 1005-0014 | Erie | 5855-505-Y5U0-503Z |
| C60 | Cer, .05μF, +80-20%, 25V | 1005-0014 | Erie | 5855-505-Y5U0-503Z |
| C61 | Elct, 1μF, ±10%, 25V | 1013-0004 | Sprague | 30D105G035GA5 |
| | DIODES | | | |
| CR1 | Si, Signal, 1N3064, 75 PIV | 1281-0013 | Teledyne | 1N3064 |
| CR2 | Si, Signal, 1N3064, 75 PIV | 1281-0013 | Teledyne | 1N3064 |
| CR3 | Si, Signal, 1N3064, 75 PIV | 1281-0013 | Teledyne | 1N3064 |
| CR4 | Diode, HP2900 | 1283-0003 | HPA | 5082-2900 |
| CR5 | Diode, HP2900 | 1283-0003 | HPA | 5082-2900 |
| CR6 | Si, Signal, 1N3064, 75 PIV | 1281-0013 | Teledyne | 1N3064 |
| CR7 | Si, Signal, 1N3064, 75 PIV | 1281-0013 | Teledyne | 1N3064 |
| CR8 | Si, Signal, 1N3064, 75 PIV | 1281-0013 | Teledyne | 1N3064 |
| CR9 | Diode, HP2800 | 1283-0001 | HPA | 5082-2800 |
| CR10 | Diode, HP2800 | 1283-0001 | HPA | 5082-2800 |
| CR11 | Si, Signal, 1N3064, 75 PIV | 1281-0013 | Teledyne | 1N3064 |
| CR12 | Si, Signal, 1N3064, 75 PIV | 1281-0013 | Teledyne | 1N3064 |
| CR13 | Si, Signal, 1N3064, 75 PIV | 1281-0013 | Teledyne | 1N3064 |
| CR14 | Si, Signal, 1N3064, 75 PIV | 1281-0013 | Teledyne | 1N3064 |
| CR15 | Si, Signal, 1N3064, 75 PIV | 1281-0013 | Teledyne | 1N3064 |
| CR16 | Si, Signal, 1N3064, 75 PIV | 1281-0013 | Teledyne | 1N3064 |
| CR17 | Si, Signal, 1N3064, 75 PIV | 1281-0013 | Teledyne | 1N3064 |
| CR18 | Si, Signal, 1N3064, 75 PIV | 1281-0013 | Teledyne | 1N3064 |
| CR19 | Si, Signal, 1N3064, 75 PIV | 1281-0013 | Teledyne | 1N3064 |
| CR20 | Si, Signal, 1N3064, 75 PIV | 1281-0013 | Teledyne | 1N3064 |
| CR21 | Si, Signal, 1N3064, 75 PIV | 1281-0013 | Teledyne | 1N3064 |
| | INDUCTORS | | | |
| L1 | RF, Choke, 47 mH | 1585-0044 | Cambion | 3635-57 |
| | TRANSISTORS | | | |
| Q1 | Si, NPN, 2N3565 | 1272-0017 | Fairchild | 2N3565 |
| Q2 | Si, PNP, 2N4121 | 1272-0023 | Fairchild | 2N4121 |
| Q3 | Si, NPN, 2N3565 | 1272-0017 | Fairchild | 2N3565 |
| Q4 | Si, NPN, 2N3642 | 1272-0018 | Fairchild | 2N3642 |
| Q5 | Si, NPN, 2N3565 | 1272-0017 | Fairchild | 2N3565 |
| Q6 | Si, NPN, 2N5089 | 1272-0031 | Motorola | 2N5089 |
| Q7 | Si, PNP, 2N5087 | 1272-0038 | Motorola | 2N5087 |
| Q8 | Si, NPN, 2N4275 | 1272-0016 | Fairchild | 2N4275 |
| Q9 | Si, NPN, 2N4275 | 1272-0016 | Fairchild | 2N4275 |
| Q10 | Si, NPN, 2N4275 | 1272-0016 | Fairchild | 2N4275 |
| Q11 | Si, NPN, 2N3642 | 1272-0018 | Fairchild | 2N3642 |
| Q12 | Si, PNP, 2N3644 | 1272-0040 | Fairchild | 2N3644 |
| Q13 | Si, NPN, 2N3642 | 1272-0018 | Fairchild | 2N3642 |
| Q14 | Si, NPN, 2N3565 | 1272-0017 | Fairchild | 2N3565 |
| Q15 | Si, NPN, 2N3565 | 1272-0017 | Fairchild | 2N3565 |

METER/AUDIO AMPLIFIER, 4500 (cont.)

| CKT. REF. | DESCRIPTION | CE STOCK NO. | MFR. | MFR. NO. |
|---|---|---|---|---|
| Q16 | Si, PNP, 2N4121 | 1272-0023 | Fairchild | 2N4121 |
| Q17 | J-Fet, N-Channel, 2N4391 | 1272-0042 | Teledyne | 2N4391 |
| Q18 | Si, NPN, 2N3565 | 1272-0017 | Fairchild | 2N3565 |
| Q19 | Si, NPN, 2N3565 | 1272-0017 | Fairchild | 2N3565 |
| Q20 | J-Fet, N-Channel, 2N4391 | 1272-0042 | Teledyne | 2N4391 |
| Q21 | Si, PNP, 2N4121 | 1272-0023 | Fairchild | 2N4121 |
| Q22 | Si, PNP, 2N4121 | 1272-0023 | Fairchild | 2N4121 |
| Q23 | J-Fet, N-Channel, 2N4391 | 1272-0042 | Teledyne | 2N4391 |
| Q24 | Si, NPN, 2N3565 | 1272-0017 | Fairchild | 2N3565 |
| Q25 | Si, NPN, 2N3642 | 1272-0018 | Fairchild | 2N3642 |
| | RESISTORS | | | |
| R1 | Comp, 20K, ±5%, 1/4W | 1066-2035 | Allen-Bradley | CB2035 |
| R2 | Comp, 10K, ±5%, 1/4W | 1066-1035 | Allen-Bradley | CB1035 |
| R3 | Comp, 10K, ±5%, 1/4W | 1066-1035 | Allen-Bradley | CB1035 |
| R4 | Comp, 4.7K, ±5%, 1/4W | 1066-4725 | Allen-Bradley | CB4725 |
| R5 | Comp, 2K, ±5%, 1/4W | 1066-2025 | Allen-Bradley | CB2025 |
| R6 | Comp, 2K, ±5%, 1/4W | 1066-2025 | Allen-Bradley | CB2025 |
| R7 | Comp, 68K, ±5%, 1/4W | 1066-6835 | Allen-Bradley | CB6835 |
| R8 | Comp, 270Ω, ±5%, 1/4W | 1066-2715 | Allen-Bradley | CB2715 |
| R9 | Comp, 10K, ±5%, 1/4W | 1066-1035 | Allen-Bradley | CB1035 |
| R10 | Comp, 10K, ±5%, 1/4 | 1066-1035 | Allen-Bradley | CB1035 |
| R11 | Comp, 10K, ±5%, 1/4W | 1066-1035 | Allen-Bradley | CB1035 |
| R12 | Comp, 10K, ±5%, 1/4W | 1066-1035 | Allen-Bradley | CB1035 |
| R13 | Comp, 10K, ±5%, 1/4W | 1066-1035 | Allen-Bradley | CB1035 |
| R14 | Comp, 100Ω, ±5%, 1/4W | 1066-1015 | Allen-Bradley | CB1015 |
| R15 | Comp, 2K, ±5%, 1/4W | 1066-2025 | Allen-Bradley | CB2025 |
| R16 | Comp, 10K, ±5%, 1/4W | 1066-1035 | Allen-Bradley | CB1035 |
| R17 | MF, 100Ω, ±1%, 1/10W, 150PPM | 1074-1033 | Dale | MFF 1/10 |
| R18 | Comp, 680Ω, ±5%, 1/4W | 1066-6815 | Allen-Bradley | CB6815 |
| R19 | MF, 10K, ±1%, 1/8W, 100PPM | 1075-0009 | Mepco | FE-12-K |
| R20 | Comp, 12K, ±5%, 1/4W | 1066-1235 | Allen-Bradley | CB1235 |
| R21 | Comp, 5.6K, ±5%, 1/4W | 1066-5625 | Allen-Bradley | CB5625 |
| R22 | Comp, 3K, ±5%, 1/4W | 1066-3025 | Allen-Bradley | CB3025 |
| R23 | Comp, 3K, ±5%, 1/4W | 1066-3025 | Allen-Bradley | CB3025 |
| R24 | Comp, 10K, ±5%, 1/4W | 1066-1035 | Allen-Bradley | CB1035 |
| R25 | Comp, 1K, ±5%, 1/4W | 1066-1025 | Allen-Bradley | CB1025 |
| R26 | Comp, 1K, ±5%, 1/4W | 1066-1025 | Allen-Bradley | CB1025 |
| R27 | Comp, 3.9K, ±5%, 1/4W | 1066-3925 | Allen-Bradley | CB3925 |
| R28 | Comp, 2.2K, ±5%, 1/4W | 1066-2225 | Allen-Bradley | CB2225 |
| R29 | Comp, 22K, ±5%, 1/4W | 1066-2235 | Allen-Bradley | CB2235 |
| R30 | Comp, 100Ω, ±5%, 1/4W | 1066-1015 | Allen-Bradley | CB1015 |
| R31 | Comp, 6.2K, ±5%, 1/4W | 1066-6225 | Allen-Bradley | CB6225 |
| R32 | Comp, 390Ω, ±5%, 1/4W | 1066-3915 | Allen-Bradley | CB3915 |
| R33 | Comp, 390Ω, ±5%, 1/4W | 1066-3915 | Allen-Bradley | CB3915 |
| R34 | Comp, 10K, ±5%, 1/4W | 1066-1035 | Allen-Bradley | CB1035 |
| R35 | Comp, 22K, ±5%, 1/4W | 1066-2235 | Allen-Bradley | CB2235 |
| R36 | MF, 10K, ±1%, 1/8W, 100PPM | 1075-0009 | Mepco | FE-12-K |
| R37 | Comp, 100Ω, ±5%, 1/4W | 1066-1015 | Allen-Bradley | CB1015 |
| R38 | Comp, 100Ω, ±5%, 1/4W | 1066-1015 | Allen-Bradley | CB1015 |
| R39 | MF, 10K, ±1%, 1/8W, 100 PPM | 1075-0009 | Mepco | FE-12-K |
| R40 | Comp, 560Ω, ±5%, 1/4W | 1066-5615 | Allen-Bradley | CB5615 |
| R41 | Comp, 3.3K, ±5%, 1/4W | 1066-3325 | Allen-Bradley | CB3325 |
| R42 | Comp, 2K, ±5%, 1/4W | 1066-2025 | Allen-Bradley | CB2025 |
| R43 | Comp, 20K, ±5%, 1/4W | 1066-2035 | Allen-Bradley | CB2035 |
| R44 | Comp, 1K, ±5%, 1/4W | 1066-1025 | Allen-Bradley | CB1025 |
| R45 | Comp, 51K, ±5%, 1/4W | 1066-5135 | Allen-Bradley | CB5135 |

METER/AUDIO AMPLIFIER, 4500 (cont.)

| CKT. REF. | DESCRIPTION | CE STOCK NO. | MFR. | MFR. NO. |
|---|---|---|---|---|
| R46 | Comp, 100K, ±5%, 1/4W | 1066-1045 | Allen-Bradley | CB1045 |
| R47 | MF, 11.3K, ±1%, 1/8W, 100 PPM | 1075-0034 | Mepco | FE-12-K |
| R48 | Comp, 2K, ±5%, 1/4W | 1066-2025 | Allen-Bradley | CB2025 |
| R49 | Comp, 1.6K, ±5%, 1/4W | 1066-1625 | Allen-Bradley | CB1625 |
| R50 | Comp, 12K, ±5%, 1/4W | 1066-1235 | Allen-Bradley | CB1235 |
| R51 | Comp, 1.5K, ±5%, 1/4W | 1066-1525 | Allen-Bradley | CB1525 |
| R52 | Comp, 3.9K, ±5%, 1/4W | 1066-3925 | Allen-Bradley | CB3925 |
| R53 | Comp, 1.5K, ±5%, 1/4W | 1066-1525 | Allen-Bradley | CB1525 |
| R54 | Comp, 5.1K, ±5%, 1/4W | 1066-5125 | Allen-Bradley | CB5125 |
| R55 | Comp, 470Ω, ±5%, 1/4W | 1066-4715 | Allen-Bradley | CB4715 |
| R56 | MF, 20K, ±1%, 1/8W, 100PPM | 1075-0096 | Mepco | FE-12-K |
| R57 | Comp, 4.3K, ±5%, 1/4W | 1066-4325 | Allen-Bradley | CB4325 |
| R58 | Comp, 5.1K, ±5%, 1/4W | 1066-5125 | Allen-Bradley | CB5125 |
| R59 | Comp, 4.3K, ±5%, 1/4W | 1066-4325 | Allen-Bradley | CB4325 |
| R60 | Comp, 82Ω, ±5%, 1/2W | 1067-8205 | Allen-Bradley | EB8205 |
| R61 | Comp, 10Ω, ±5%, 1/4W | 1066-1005 | Allen-Bradley | CB1005 |
| R62 | Comp, 10Ω, ±5%, 1/4W | 1066-1005 | Allen-Bradley | CB1005 |
| R63 | Comp, 4.7K, ±5%, 1/4W | 1066-4725 | Allen-Bradley | CB4725 |
| R64 | Comp, 4.7K, ±5%, 1/4W | 1066-4725 | Allen-Bradley | CB4725 |
| R65 | Comp, 4.7K, ±5%, 1/4W | 1066-4725 | Allen-Bradley | CB4725 |
| R66 | Comp, 4.7K, ±5%, 1/4W | 1066-4725 | Allen-Bradley | CB4725 |
| R67 | Comp, 10K, ±5%, 1/4W | 1066-1035 | Allen-Bradley | CB1035 |
| R68 | Comp, 4.7K, ±5%, 1/4W | 1066-4725 | Allen-Bradley | CB4725 |
| R69 | Comp, 10K, ±5%, 1/4W | 1066-1035 | Allen-Bradley | CB1035 |
| R70 | Comp, 10K, ±5%, 1/4W | 1066-1035 | Allen-Bradley | CB1035 |
| R71 | Comp, 22Ω, ±5%, 1/4W | 1066-2205 | Allen-Bradley | CB2205 |
| R72 | Comp, 4.7K, ±5%, 1/4W | 1066-4725 | Allen-Bradley | CB4725 |
| R73 | Comp, 4.7K, ±5%, 1/4W | 1066-4725 | Allen-Bradley | CB4725 |
| R74 | Comp, 100K, ±5%, 1/4W | 1066-1045 | Allen-Bradley | CB1045 |
| R75 | MF, 20K, ±1%, 1/8W, 100 PPM | 1075-0096 | Mepco | FE-12-K |
| R76 | Comp, 10K, ±5%, 1/4W | 1066-1035 | Allen-Bradley | CB1035 |
| R77 | Comp, 4.7K, ±5%, 1/4W | 1066-4725 | Allen-Bradley | CB4725 |
| R78 | Comp, 2K, ±5%, 1/4W | 1066-2025 | Allen-Bradley | CB2025 |
| R79 | Comp, 30K, ±5%, 1/4W | 1066-3035 | Allen-Bradley | CB3025 |
| R80 | Comp, 10K, ±5%, 1/4W | 1066-1035 | Allen-Bradley | CB1035 |
| R81 | Comp, 10K, ±5%, 1/4W | 1066-1035 | Allen-Bradley | CB1035 |
| R82 | Comp, 82Ω, ±5%, 1/2W | 1067-8205 | Allen-Bradley | EB8205 |
| R83 | Comp, 4.7K, ±5%, 1/4W | 1066-4725 | Allen-Bradley | CB4725 |
| R84 | Comp, 2K, ±5%, 1/4W | 1066-2025 | Allen-Bradley | CB2025 |
| R85 | Comp, 30K, ±5%, 1/4W | 1066-3035 | Allen-Bradley | CB3035 |
| R86 | Comp, 100K, ±5%, 1/4W | 1066-1045 | Allen-Bradley | CB1045 |
| R87 | Comp, 91K, ±5%, 1/4W | 1066-9135 | Allen-Bradley | CB9135 |
| R88 | Comp, 1 Meg, ±5%, 1/4W | 1066-1055 | Allen-Bradley | CB1055 |
| R89 | Comp, 30K, ±5%, 1/4W | 1066-3035 | Allen-Bradley | CB3035 |
| R90 | Comp, 30K, ±5%, 1/4W | 1066-3035 | Allen-Bradley | CB3035 |
| R91 | Comp, 30K, ±5%, 1/4W | 1066-3035 | Allen-Bradley | CB3035 |
| R92 | Comp, 30K, ±5%, 1/4W | 1066-3035 | Allen-Bradley | CB3035 |
| R93 | Comp, 30K, ±5%, 1/4W | 1066-3035 | Allen-Bradley | CB3035 |
| R94 | Comp, 1K, ±5%, 1/4W | 1066-1025 | Allen-Bradley | CB1025 |
| R95 | Comp, 1K, ±5%, 1/4W | 1066-1025 | Allen-Bradley | CB1025 |
| R96 | Comp, 300Ω, ±5%, 1/4W | 1066-3015 | Allen-Bradley | CB3015 |
| R97 | MF, 20K, ±1%, 1/8W, 100PPM | 1075-0096 | Allen-Bradley | FE-12-K |
| R98 | Comp, 10K, ±5%, 1/4W | 1066-1035 | Allen-Bradley | CB1035 |
| R99 | Comp, 15K, ±5%, 1/4W | 1066-1535 | Allen-Bradley | CB1535 |
| R100 | Comp, 2K, ±5%, 1/4W | 1066-2025 | Allen-Bradley | CB2025 |

METER/AUDIO AMPLIFIER, 4500 (cont.)

| CKT. REF. | DESCRIPTION | CE STOCK NO. | MFR. | MFR. NO. |
|---|---|---|---|---|
| R101 | Comp, 2K, ±5%, 1/4W | 1066-2025 | Allen-Bradley | CB2025 |
| R102 | Comp, 2K, ±5%, 1/4W | 1066-2025 | Allen-Bradley | CB2025 |
| R103 | Comp, 2K, ±5%, 1/4W | 1066-2025 | Allen-Bradley | CB2025 |
| R104 | MF, 20K, ±1%, 1/8W, 100PPM | 1075-0096 | Mepco | FE-12-K |
| R105 | Comp, 4.7K, ±5%, 1/4W | 1066-4725 | Allen-Bradley | CB4725 |
| R106 | Comp, 220Ω, ±5%, 1/4W | 1066-2215 | Allen-Bradley | CB2215 |
| R107 | MF, 1K, ±1%, 1/8W, 100PPM | 1075-0037 | Mepco | FE-12-K |
| R108 | Comp, 1K, ±5%, 1/4W | 1066-1025 | Allen-Bradley | CB1025 |
| R109 | Comp, 1K, ±5%, 1/4W | 1066-1025 | Allen-Bradley | CB1025 |
| R110 | MF, 47.5K, ±1%, 1/8W, 150PPM | 1075-0076 | Mepco | FE-12-K |
| R111 | Pot, 10K, ±10%, 3/4W | 1215-0014 | Helitrim | 89 WR |
| R112 | Comp, 1K, ±5%, 1/4W | 1066-1025 | Allen-Bradley | CB1025 |
| R113 | Pot, 500Ω, ±10%, 3/4W | 1215-0011 | Helitrim | 89 WR |
| R114 | Comp, 7.5K, ±5%, 1/4W | 1066-7525 | Allen-Bradley | CB7525 |
| R115 | Comp, 5.1K, ±5%, 1/4W | 1066-5125 | Allen-Bradley | CB5125 |
| R116 | Comp, 47K, ±5%, 1/4W | 1066-4735 | Allen-Bradley | CB4735 |
| R117 | Comp, 820Ω, ±5%, 1/4W | 1066-8215 | Allen-Bradley | CB8215 |
| R118 | Pot, 500Ω, ±10%, 3/4W | 1215-0011 | Helitrim | 89 WR |
| R119 | Comp, 18K, ±5%, 1/4W | 1066-1835 | Allen-Bradley | CB1835 |
| R120 | Comp, 2K, ±5%, 1/4W | 1066-2025 | Allen-Bradley | CB2025 |
| R121 | Comp, 10K, ±5%, 1/4W | 1066-1035 | Allen-Bradley | CB1035 |
| R122 | Comp, 2K, ±5%, 1/4W | 1066-2025 | Allen-Bradley | CB2025 |
| R123 | MF, 1K, ±1%, 1/8W, 100PPM | 1075-0037 | Mepco | FE-12-K |
| R124 | Comp, 5.1K, ±5%, 1/4W | 1066-5125 | Allen-Bradley | CB5125 |
| R125 | Comp, 4.7K, ±5%, 1/4W | 1066-4725 | Allen-Bradley | CB4725 |
| R126 | MF, 10K, ±10%, 1/8W, 100PPM | 1075-0009 | Mepco | FE-12-K |
| R127 | Comp, 20K, ±5%, 1/4W | 1066-2035 | Allen-Bradley | CB2035 |
| R128 | Comp, 1.8K, ±5%, 1/4W | 1066-1825 | Allen-Bradley | CB1825 |
| R129 | Comp, 30K, ±5%, 1/4W | 1066-3035 | Allen-Bradley | CB3035 |
| R130 | Comp, 3.6K, ±5%, 1/4W | 1066-3625 | Allen-Bradley | CB3625 |
| | INTEGRATED CIRCUITS | | | |
| U1 | IC, CA3026, Dual Diff Ampl | 2025-0026 | RCA | CA3026 |
| U2 | IC, LM301A Op Ampl | 2025-0032 | National | LM301A |
| U3 | IC, SN72741P HI Perf Op Ampl | 2025-0067 | T.I. | SN72741P |
| U4 | IC, SN72741P HI Perf Op Ampl | 2025-0067 | T.I. | SN72741P |
| U5 | IC, LM308N Op Amp | 2025-0070 | National | LM308N |
| U6 | IC, SN72741P HI Perf Op Ampl | 2025-0067 | T.I. | SN74741P |
| U7 | IC, SN72741P HI Perf Op Ampl | 2025-0067 | T.I. | SN74741P |
| U8 | IC, LM308N Op Amp | 2025-0070 | National | LM308N |
| U9 | IC, SN72741P HI Perf Op Ampl | 2025-0067 | T.I. | SN74741P |
| | CRYSTAL | | | |
| Y1 | 78.0 kHz | 2035-0023 | Cushman | |
| Y2 | 82.0 kHz | 2035-0024 | Cushman | |

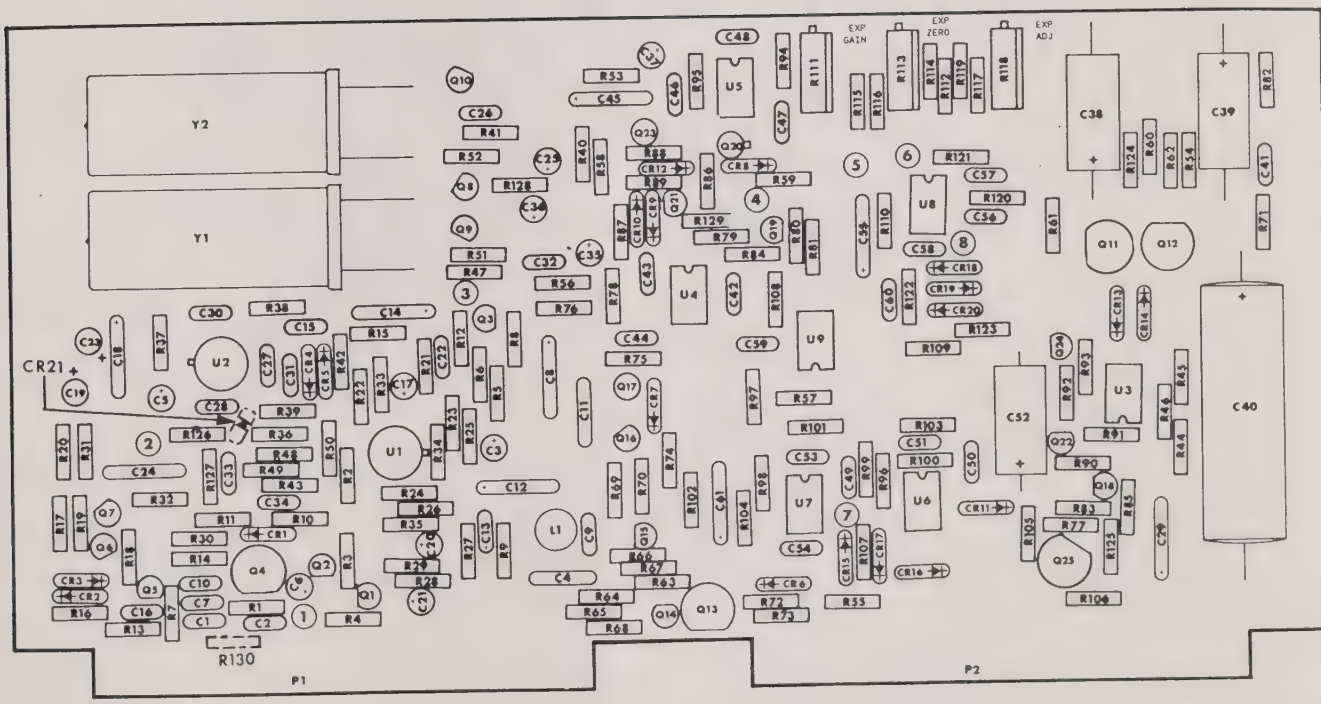
EXP GAIN
EXP ZERO
EXP ADJ
Y2
Y1
CR21
R130
P1
P2

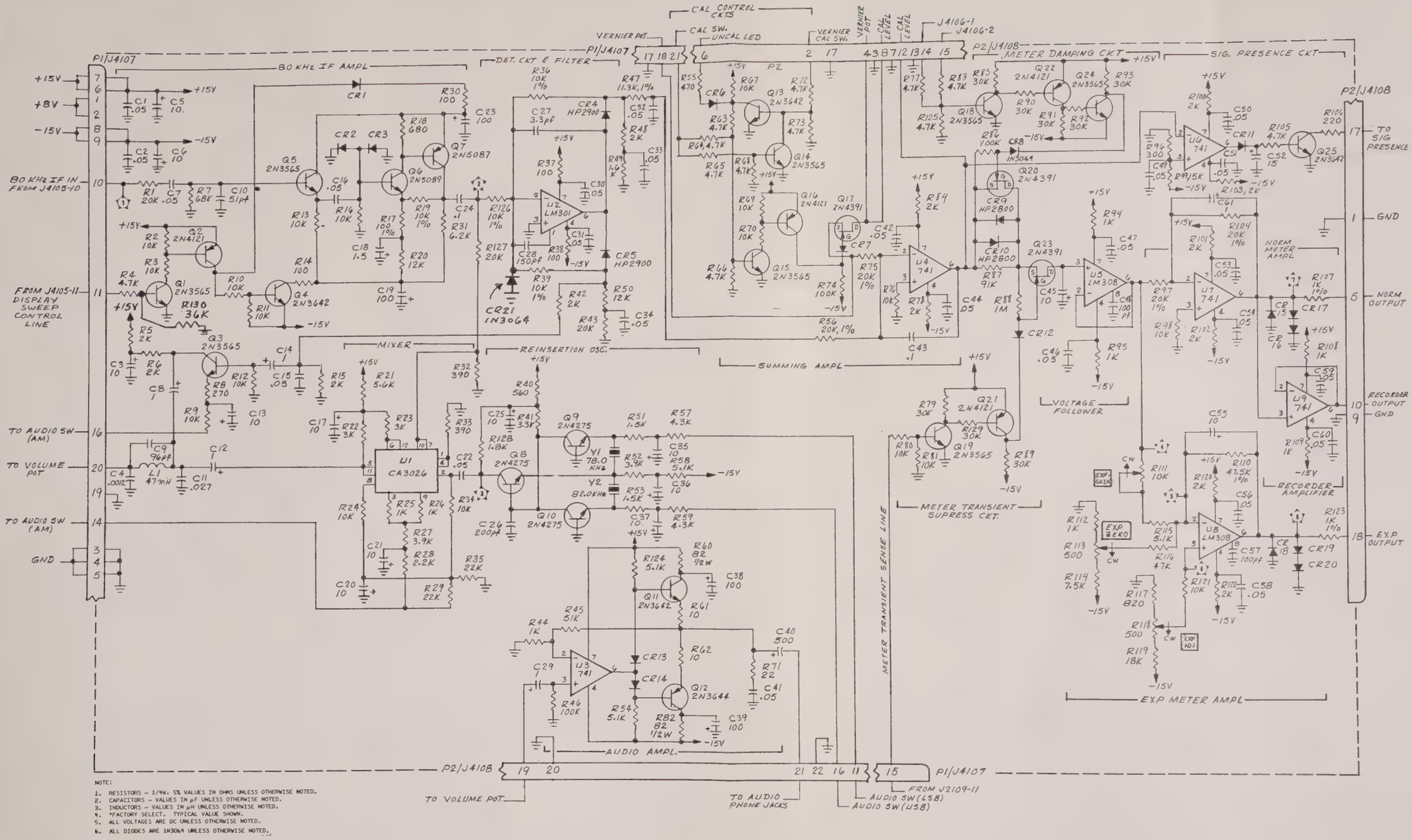


NOTE:

1. RESISTORS – 1/4W, 5% VALUES IN OHMS UNLESS OTHERWISE NOTED.
2. CAPACITORS – VALUES IN μF UNLESS OTHERWISE NOTED.
3. INDUCTORS – VALUES IN μH UNLESS OTHERWISE NOTED.
4. *FACTORY SELECT. TYPICAL VALUE SHOWN.
5. ALL VOLTAGES ARE DC UNLESS OTHERWISE NOTED.
6. ALL DIODES ARE 1N3064 UNLESS OTHERWISE NOTED.

5601••0063••3

Figure 30. Meter/Audio Amplifier, 4500.

SEMI-AUTOMATIC CAL/BFO, 4600

| CKT. REF. | DESCRIPTION | CE STOCK NO. | MFR. | MFR. NO. |
|---|---|---|---|---|
| 4600 | Semi-Auto Cal/BFO PCB Assy | 7001-0297 | Cushman | |
| | P.C. Board | 1780-0553 | Cushman | |
| | CAPACITORS | | | |
| C1 | Cer, .002μF, ±20%, 500V | 1005-0003 | Erie | 831-596-Z5U-202M |
| C2 | Cer, .002μF, ±20%, 500V | 1005-0003 | Erie | 831-596-Z5U-202M |
| C3 | Cer, .002μF, ±20%, 500V | 1005-0003 | Erie | 831-596-Z5U-202M |
| C4 | Cer, .002μF, ±20%, 500V | 1005-0003 | Erie | 831-596-Z5U-202M |
| C5 | Mica, 18pF, ±5%, 500V | 1002-0014 | Elmenco | DM15-C-180J |
| C6 | Tant, 10μF, +50-20%, 35V | 1011-0006 | ITT | TAG-10/35-20 |
| C7 | Tant, 10μF, +50-20%, 35V | 1011-0006 | ITT | TAG-10/35-20 |
| C8 | Cer, .05μF, +80-20%, 25V | 1005-0014 | Erie | 5855-505-Y5U0-503Z |
| C9 | Elct, 100μF, ±10%, 25V | 1013-0003 | Sprague | 30D107G025DD5 |
| C10 | Mica, 1000pF, ±5%, 100V | 1002-0015 | Elmenco | DM15-F-102J |
| C11 | Tant, 10μF, + 0-20%, 35V | 1005-0006 | ITT | TAG-10/35-20 |
| C12 | Poly, .39μF, ±10%, 20V | 1008-0037 | Electrocube | 625B1C394K2 |
| C13 | Cer, .05μF, +80-20%, 25V | 1005-0014 | Erie | 5855-505-Y5U0-503Z |
| C14 | Cer, .05μF, +80-20%, 25V | 1005-0014 | Erie | 5855-505-Y5U0-503Z |
| C15 | Mica, 15pF, ±5%, 500V | 1002-0001 | Elmenco | DM15-C-150J |
| C16 | Mica, 33pF, ±5%, 500V | 1002-0024 | Elmenco | DM15-E-330J |
| C17 | Mica, 15pF, ±5%, 500V | 1002-0001 | Elmenco | DM15-C-150J |
| C18 | Mica, 1000pF, ±5%, 100V | 1002-0015 | Elmenco | DM15-F-102J |
| C19 | Cer, .01μF, +80-20%, 25V | 1005-0013 | Erie | 5835-512-Y5U-103Z |
| C20 | Tant, 1μF, ±20%, 50V | 1011-0013 | Kemet | T368A105M050AS |
| C21 | Tant, 1μF, ±20%, 50V | 1011-0013 | Kemet | T368A105M050AS |
| C22 | Mica, 510pF, ±5%, 500V | 1002-0036 | Elmenco | DM15-F-511J |
| C23 | Mica, 10pF, ±5%, 500V | 1002-0016 | Elmenco | D15-C-100J |
| C24 | Cer, .002μF, ±20%, 500V | 1005-0003 | Erie | 831-596-Z5U-202M |
| C25 | Mica, 68pF, ±5%, 500V | 1002-0013 | Elmenco | DM15-E-680J |
| C26 | Tant, 10μF, +50-20%, 35V | 1011-0006 | ITT | TAG-10/35-20 |
| C27 | Cer, .002μF, ±20%, 500V | 1005-0003 | Erie | 831-596-Z5U-202M |
| C28 | Mica, 68pF, ±5%, 500V | 1002-0013 | Elmenco | DM15-E-680J |
| C29 | Mica, 220pF, ±5%, 500V | 1002-0029 | Elmenco | DM15-F-221J |
| C30 | Mica, 300pF, ±5%, 500V | 1002-0059 | Elmenco | DM15-301J |
| C31 | Mica, 820pF, ±5%, 300V | 1002-0039 | Elmenco | DM15-F-821J |
| C32 | Mica, 820pF, ±5%, 300V | 1002-0039 | Elmenco | DM15-F-821J |
| C33 | Cer, .05μF, +80-20%, 25V | 1005-0014 | Erie | 5855-505-Y5U0-503Z |
| C34 | Elct, 100μF, ±10%, 25V | 1013-0003 | Sprague | 30D107G025DD5 |
| C35 | Cer, .05μF, +80-20%, 25V | 1005-0014 | Erie | 5855-505-Y5U0-503Z |
| C36 | Cer, .05μF, +80-20%, 25V | 1005-0014 | Erie | 5855-505-Y5U0-503Z |
| C37 | Mica, 510pF, ±5%, 500V | 1002-0036 | Elmenco | DM15-F-511J |
| C38 | Cer, .05μF, +80-20%, 25V | 1005-0014 | Erie | 5855-505-Y5U0-503Z |
| C39 | Cer, .05μF, +80-20%, 25V | 1005-0014 | Erie | 5855-505-Y5U0-503Z |
| C40 | Tant, 10μF, +50-20%, 35V | 1011-0006 | ITT | TAG-10/35-20 |
| C41 | Cer, .05μF, +80-20%, 25V | 1005-0014 | Erie | 5855-505-Y5U0-503Z |
| C42 | Cer, .05μF, +80-20%, 25V | 1005-0014 | Erie | 5855-505-Y5U0-503Z |
| C43 | Mica, 1000pF, ±5%, 100V | 1002-0015 | Elmenco | DM-51F-102J |
| C44 | Cer, .002μF, ±20%, 500V | 1005-0003 | Erie | 831-596-Z5U-202M |
| C45 | Cer, .002μF, ±20%, 500V | 1005-0003 | Erie | 831-596-Z5U-202M |
| C46 | Cer, .002μF, ±20%, 500V | 1005-0003 | Erie | 831-596-Z5U-202M |
| C47 | Cer, .002μF, ±20%, 500V | 1005-0003 | Erie | 831-596-Z5U-202M |
| C48 | Cer, .002μF, ±20%, 500V | 1005-0003 | Erie | 831-596-Z5U-202M |
| C49 | Cer, .002μF, ±20%, 500V | 1005-0003 | Erie | 831-596-Z5U-202M |
| C50 | Cer, .002μF, ±20%, 500V | 1005-0003 | Erie | 831-596-Z5U-202M |

SEMI-AUTOMATIC CAL/BFO, 4600 (cont.)

| CKT. REF. | DESCRIPTION | CE STOCK NO. | MFR. | MFR. NO. |
|---|---|---|---|---|
| C51 | Cer, .002μF, ±20%, 500V | 1005-0003 | Erie | 831-596-Z5U-202M |
| C52 | Cer, .002μF, ±20%, 500V | 1005-0003 | Erie | 831-596-Z5U-202M |
| C53 | Cer, .002μF, ±20%, 500V | 1005-0003 | Erie | 831-596-Z5U-202M |
| C54 | Cer, .002μF, ±20%, 500V | 1005-0003 | Erie | 831-596-Z5U-202M |
| C55 | Cer, .002μF, ±20%, 500V | 1005-0003 | Erie | 831-596-Z5U-202M |
| C56 | Mica, 43pF, ±5%, 500V | 1002-0046 | Elmenco | DM15-E-430J |
| C57 | Mica, 15pF, ±5%, 500V | 1002-0001 | Elmenco | DM15-C-150J |
| C58 | Mica, 12pF, ±5%, 500V | 1002-0017 | Elmenco | DM15-C-120J |
| C59 | Tant, 10μF, +50-20%, 35V | 1011-0006 | ITT | TAG-10/35-20 |
| C60 | Cer, .01μF, +80-20%, 25V | 1005-0013 | Erie | 5835-512-Y5U-103Z |
| C61 | Cer, .01μF, +80-20%, 25V | 1005-0013 | Erie | 5835-512-Y5U-103Z |
| C62 | Tant, 10μF, +50-20%, 35V | 1011-0006 | ITT | TAG-10/35-20 |
| C63 | Cer, .01μF, +80-20%, 25V | 1005-0013 | Erie | 5835-512-Y5U-103Z |
| C64 | Cer, 2.2pF, .25pF, 500V | 1005-0017 | Erie | 301-000-C0J0-229C |
| C65 | Mica, 15pF, ±5%, 500V | 1002-0001 | Elmenco | DM15-C-150J |
| C66 | Mica, 20pF, ±5%, 500V | 1002-0060 | Elmenco | DM15-200J |
| C67 | Mica, 10pF, ±5%, 500V | 1002-0016 | Elmenco | DM15-C-100J |
| C68 | Mica, 43pF, ±5%, 500V | 1002-0046 | Elmenco | DM15-E-430J |
| C69 | Mica, 100pF, ±5%, 500V | 1002-0011 | Elmenco | DM15-F-101J |
| C70 | Mica, 100pF, ±5%, 500V | 1002-0011 | Elmenco | DM15-F-101J |
| C71 | Mica, 96pF, ±5%, 500V | 1002-0049 | Elmenco | DM15-F-960F |
| C72 | Mica, 36pF, ±5%, 500V | 1002-0041 | Elmenco | DM15-E-360J |
| C73 | Tant, 10μF, +50-20%, 35V | 1011-0006 | ITT | TAG-10/35-20 |
| C74 | Cer, .01μF, +80-20%, 25V | 1005-0013 | Erie | 5835-512-Y5U-103Z |
| C75 | Cer, .05μF, +80-20%, 25V | 1005-0014 | Erie | 5855-505-Y5U0-503Z |
| C76 | Cer, .01μF, +80-20%, 25V | 1005-0013 | Erie | 5835-512-Y5U-103Z |
| C77 | Cer, .05μF, +80-20%, 25V | 1005-0014 | Erie | 5855-505-Y5U0-503Z |
| C78 | Poly, .027μF, ±10%, 100V | 1008-0032 | Sprague | 225P27391 |
| C79 | Cer, .05μF, +80-20%, 25V | 1005-0014 | Erie | 5855-505-Y5U0-503Z |
| C80 | Cer, .01μF, +80-20%, 25V | 1005-0013 | Erie | 5835-512-Y5U-103Z |
| C81 | Cer, .01μF, +80-20%, 25V | 1005-0013 | Erie | 5835-512-Y5U-103Z |
| C82 | Cer, .01μF, +80-20%, 25V | 1005-0013 | Erie | 5835-512-Y5U-103Z |
| C83 | Tant, 10μF, +50-20%, 35V | 1011-0006 | ITT | TAG-10/35-20 |
| C84 | Cer, .01μF, +80-20%, 25V | 1005-0013 | Erie | 5835-512-Y5U-103Z |
| C85 | Tant, 10μF, +50-20%, 35V | 1011-0006 | ITT | TAG-10/35-20 |
| C86 | Tant, 10μF, +50-20%, 35V | 1011-0006 | ITT | TAG-10/35-20 |
| C87 | Cer, .05μF, +80-20%, 25V | 1005-0014 | Erie | 5855-505-Y5U0-503Z |
| C88 | Cer, .01μF, +80-20%, 25V | 1005-0013 | Erie | 5835-512-Y5U-103Z |
| C89 | Mica, FSV, ±5%, 500V | 1002-xxxx | Elmenco | DM15 |
| C90 | Tant, 100μF, ±20%, 20V | 1011-0010 | Kemet | T362D107M020AS |
| C91 | Cer, .01μF, +80-20%, 25V | 1005-0013 | Erie | 5835-512-Y5U-103Z |
| C92 | Cer, .05μF, +80-20%, 25V | 1005-0014 | Erie | 5855-505-Y5U0-503Z |
| C93 | Tant, 10μF, +50-20%, 35V | 1011-0006 | ITT | TAG-10/35-20 |
| C94 | Mica, FSV, ±5%, 500V | 1002-xxxx | Elmenco | DM15 |
| C95 | Mica, FSV, ±5%, 500V | 1002-xxxx | Elmenco | DM15 |
| C96 | Tant, 2.2μF, ±10%, 35V | 1011-0001 | Dickson | D2R2GSB35K |
| C97 | Cer, .01μF, ±10%, 100V | 1005-0065 | Aerovox | CK06BX103K |
| C98 | Cer, 1000pF, ±10%, 100V | 1005-0081 | Centre | 200-100-W5R-102K |
| C99 | Cer, .002μF, ±20%, 500V | 1005-0003 | Erie | 831-596-Z5U-202M |
| | DIODES | | | |
| CR1 | MV109, Var | 1281-0064 | Motorola | MV109 |
| CR2 | G633, Ge | 1281-0005 | Cushman | |
| CR3 | G633, Ge | 1281-0005 | Cushman | |
| CR4 | G633, Ge | 1281-0005 | Cushman | |
| CR5 | G633, Ge | 1281-0005 | Cushman | |

SEMI-AUTOMATIC CAL/BFO, 4600 (cont.)

| CKT. REF. | DESCRIPTION | CE STOCK NO. | MFR. | MFR. NO. |
|---|---|---|---|---|
| CR6 | G633, Ge | 1281-0005 | Cushman | |
| CR7 | Microwave, PIN, 1SV34 | 1281-0075 | Nippon | 1SV34 |
| CR8 | Si, Zener, Ref, 1N827 | 1281-0038 | Transitron | 1N827 |
| CR9 | HP2800 | 1283-0001 | HPA | 5082-2800 |
| CR10 | HP2800 | 1283-0001 | HPA | 5082-2800 |
| CR11 | Si, Signal, 75 PIV, 1N3064 | 1281-0013 | Fairchild | 1N3064 |
| | CONNECTORS | | | |
| J1 | Conn, Smb, 50 Ohm, Rtang, JK, PC MT | 2536-0060 | Cablewave | 700214NP |
| J2 | Conn, Smb, 50 Ohm, Rtang, JK, PC MT | 2536-0060 | Cablewave | 700214NP |
| J3 | Conn, Smb, 50 Ohm, Rtang, JK, PC MT | 2536-0060 | Cablewave | 700214NP |
| J4 | Conn, Smb, 50 Ohm, Rtang, JK, PC, MT, Snap-On | 2536-0060 | Cablewave | 700214NP |
| | RELAY | | | |
| K1 | DPDT, 12V | 1313-0011 | Cushman | |
| | INDUCTORS | | | |
| L1 | RF, Choke, 1μH, ±10% | 1585-0027 | Delevan | 1537-12 |
| L2 | RF, Choke, .47μH, ±20% | 1585-0031 | Delevan | 1537-06 |
| L3 | RF, Choke, 1000μH, ±5% | 1585-0020 | Delevan | 2500-28 |
| L4 | Coil, Var | 1596-6601 | Cushman | |
| L5 | RF, Choke, 10μH, ±10% | 1585-0016 | Delevan | 1537-36 |
| L6 | RF, Choke, 1μH, ±10% | 1585-0027 | Delevan | 1537-12 |
| L7 | RF, Choke, 1000μH, ±5% | 1585-0020 | Delevan | 2500-28 |
| L8 | RF, Choke, 100μH, ±5% | 1585-0017 | Delevan | 1537-76 |
| L9 | RF, Choke, 1μH, ±10% | 1585-0027 | Delevan | 1537-12 |
| L10 | RF, Choke, 1μH, ±10% | 1585-0027 | Delevan | 1537-12 |
| L11 | RF, Choke, 1μH, ±10% | 1585-0027 | Delevan | 1537-12 |
| L12 | RF, Choke, 1μH, ±10% | 1585-0027 | Delevan | 1537-12 |
| L13 | Coil, Var | 1596-0217 | Cushman | |
| L14 | Coil, Var | 1596-8105 | Cushman | |
| L15 | Coil, Var | 1596-8105 | Cushman | |
| L16 | Coil, Var | 1596-8105 | Cushman | |
| L17 | Coil, Var | 1596-8105 | Cushman | |
| L18 | RF, Choke, 1μH, ±10% | 1585-0027 | Delevan | 1537-12 |
| L19 | RF, Choke, 1μH, ±10% | 1585-0027 | Delevan | 1537-12 |
| | TRANSISTORS | | | |
| Q1 | Si, NPN, 2N5179 | 1272-0067 | RCA | 2N5179 |
| Q2 | Si, NPN, 2N3642 | 1272-0018 | Fairchild | 2N3642 |
| Q3 | Si, NPN, 2N3565 | 1272-0017 | Fairchild | 2N3565 |
| Q4 | Si, NPN, 2N3565 | 1272-0017 | Fairchild | 2N3565 |
| Q5 | Si, NPN, 2N3565 | 1272-0017 | Fairchild | 2N3565 |
| Q6 | Si, NPN, 2N3565 | 1272-0017 | Fairchild | 2N3565 |
| Q7 | Si, NPN, 2N3565 | 1272-0017 | Fairchild | 2N3565 |
| Q8 | Si, NPN, 2N5179 | 1272-0067 | RCA | 2N5179 |
| Q9 | Si, NPN, 2N3563 | 1272-0022 | Fairchild | 2N3563 |
| Q10 | Si, NPN, 2N3563 | 1272-0022 | Fairchild | 2N3563 |
| Q11 | Si, NPN, 2N3565 | 1272-0017 | Fairchild | 2N3565 |
| Q12 | Si, PNP, 2N3644 | 1272-0040 | Fairchild | 2N3644 |
| Q13 | Si, NPN, 2N3565 | 1272-0017 | Fairchild | 2N3565 |
| Q14 | Si, NPN, 2N3565 | 1272-0017 | Fairchild | 2N3565 |
| Q15 | Si, NPN, 2N3563 | 1272-0022 | Fairchild | 2N3563 |

SEMI-AUTOMATIC CAL/BFO, 4600 (cont.)

| CKT. REF. | DESCRIPTION | CE STOCK NO. | MFR. | MFR. NO. |
|---|---|---|---|---|
| Q16 | Si, NPN, 2N3563 | 1272-0022 | Fairchild | 2N3563 |
| Q17 | Si, NPN, 2N3563 | 1272-0022 | Fairchild | 2N3563 |
| Q18 | Si, NPN, 2N5179 | 1272-0067 | RCA | 2N5179 |
| Q19 | Si, NPN, 2N3563 | 1272-0022 | Fairchild | 2N3563 |
| Q20 | Si, NPN, 2N3563 | 1272-0022 | Fairchild | 2N3563 |
| Q21 | Si, NPN, 2N3563 | 1272-0022 | Fairchild | 2N3563 |
| Q22 | Si, NPN, 2N3563 | 1272-0022 | Fairchild | 2N3563 |
| Q23 | Si, NPN, 2N5179 | 1272-0067 | RCA | 2N5179 |
| Q24 | Si, NPN, 2N3565 | 1272-0017 | Fairchild | 2N3565 |
| | RESISTORS | | | |
| R1 | Comp, 51 Ohm, ±5%, 1/4W | 1066-5105 | Allen-Bradley | CB5105 |
| R2 | Comp, 10K, ±5%, 1/4W | 1066-1035 | Allen-Bradley | CB1035 |
| R3 | Comp, 8.2K, ±5%, 1/4W | 1066-8225 | Allen-Bradley | CB8225 |
| R4 | Comp, 100Ω, ±5%, 1/4W | 1066-1015 | Allen-Bradley | CB1015 |
| R5 | Comp, 680Ω, ±5%, 1/4W | 1066-6815 | Allen-Bradley | CB6815 |
| R6 | Comp, 180Ω, ±5%, 1/4W | 1066-1815 | Allen-Bradley | CB1815 |
| R7 | Comp, 470Ω, ±5%, 1/4W | 1066-4715 | Allen-Bradley | CB4715 |
| R8 | Comp, 10K, ±5%, 1/4W | 1066-1035 | Allen-Bradley | CB1035 |
| R9 | Comp, 1K, ±5%, 1/4W | 1066-1025 | Allen-Bradley | CB1025 |
| R10 | Comp, 1.5K, ±5%, 1/4W | 1066-1525 | Allen-Bradley | CB1525 |
| R11 | Comp, 1.5K, ±5%, 1/4W | 1066-1525 | Allen-Bradley | CB1525 |
| R12 | Comp, 240K, ±5%, 1/4W | 1066-2445 | Allen-Bradley | CB2445 |
| R13 | Comp, 130K, ±5%, 1/4W | 1066-1345 | Allen-Bradley | CB1345 |
| R14 | Comp, 15K, ±5%, 1/4W | 1066-1535 | Allen-Bradley | CB1535 |
| R15 | Comp, 100Ω, ±5%, 1/4W | 1066-1015 | Allen-Bradley | CB1015 |
| R16 | Comp, 2.4K, ±5%, 1/4W | 1066-2425 | Allen-Bradley | CB2425 |
| R17 | Comp, 100Ω, ±5%, 1/4W | 1066-1015 | Allen-Bradley | CB1015 |
| R18 | Comp, 3.9K, ±5%, 1/4W | 1066-3925 | Allen-Bradley | CB3925 |
| R19 | Comp, 5.1K, ±5%, 1/4W | 1066-5125 | Allen-Bradley | CB5125 |
| R20 | Comp, 3.3K, ±5%, 1/4W | 1066-3325 | Allen-Bradley | CB3325 |
| R21 | Comp, 100K, ±5%, 1/4W | 1066-1045 | Allen-Bradley | CB1045 |
| R22 | Comp, 15K, ±5%, 1/4W | 1066-1535 | Allen-Bradley | CB1535 |
| R23 | Comp, 15K, ±5%, 1/4W | 1066-1535 | Allen-Bradley | CB1535 |
| R24 | Comp, 100K, ±5%, 1/4W | 1066-1045 | Allen-Bradley | CB1045 |
| R25 | Comp, 47K, ±5%, 1/4W | 1066-4735 | Allen-Bradley | CB4735 |
| R26 | Comp, 10K, ±5%, 1/4W | 1066-1035 | Allen-Bradley | CB1035 |
| R27 | Comp, 1K, ±5%, 1/4W | 1066-1025 | Allen-Bradley | CB1025 |
| R28 | Comp, 1K, ±5%, 1/4W | 1066-1025 | Allen-Bradley | CB1025 |
| R29 | Comp, 100Ω, ±5%, 1/4W | 1066-1015 | Allen-Bradley | CB1015 |
| R30 | Comp, 10K, ±5%, 1/4W | 1066-1035 | Allen-Bradley | CB1035 |
| R31 | Comp, 1K, ±5%, 1/4W | 1066-1025 | Allen-Bradley | CB1025 |
| R32 | Comp, 1K, ±5%, 1/4W | 1066-1025 | Allen-Bradley | CB1025 |
| R33 | Comp, 15K, ±5%, 1/4W | 1066-1535 | Allen-Bradley | CB1535 |
| R34 | Comp, 4.7K, ±5%, 1/4W | 1066-4725 | Allen-Bradley | CB4725 |
| R35 | Comp, 220Ω, ±5%, 1/4W | 1066-2215 | Allen-Bradley | CB2215 |
| R36 | Comp, 220Ω, ±5%, 1/4W | 1066-2215 | Allen-Bradley | CB2215 |
| R37 | Comp, 1K, ±5%, 1/4W | 1066-1025 | Allen-Bradley | CB1025 |
| R38 | Comp, 10Ω, ±5%, 1/4W | 1066-1005 | Allen-Bradley | CB1005 |
| R39 | Comp, 220Ω, ±5%, 1/4W | 1066-2215 | Allen-Bradley | CB2215 |
| R40 | Comp, 10K, ±5%, 1/4W | 1066-1035 | Allen-Bradley | CB1035 |

SEMI-AUTOMATIC CAL/ BFO, 4600 (cont.)

| CKT. REF. | DESCRIPTION | CE STOCK NO. | MFR. | MFR. NO. |
|---|---|---|---|---|
| R41 | Comp, 100Ω, ±5%, 1/4W | 1066-1015 | Allen-Bradley | CB1015 |
| R42 | Comp, 10K, ±5%, 1/4W | 1066-1035 | Allen-Bradley | CB1035 |
| R43 | Comp, 51 Ohm, ±5%, 1/4W | 1066-5105 | Allen-Bradley | CB5105 |
| R44 | Comp, 2.7K, ±5%, 1/4W | 1066-2725 | Allen-Bradley | CB2725 |
| R45 | Comp, 1K, ±5%, 1/4W | 1066-1025 | Allen-Bradley | CB1025 |
| R46 | Comp, 51 Ohm, ±5%, 1/4W | 1066-5105 | Allen-Bradley | CB5105 |
| R47 | Comp, 1K, ±5%, 1/4W | 1066-1025 | Allen-Bradley | CB1025 |
| R48 | Comp, 10K, ±5%, 1/4W | 1066-1035 | Allen-Bradley | CB1035 |
| R49 | Comp, 1K, ±5%, 1/4W | 1066-1025 | Allen-Bradley | CB1025 |
| R50 | Comp, 10K, ±5%, 1/4W | 1066-1035 | Allen-Bradley | CB1035 |
| R51 | Comp, 10K, ±5%, 1/4W | 1066-1035 | Allen-Bradley | CB1035 |
| R52 | Comp, 10K, ±5%, 1/4W | 1066-1035 | Allen-Bradley | CB1035 |
| R53 | Comp, 2K, ±5%, 1/4W | 1066-2025 | Allen-Bradley | CB2025 |
| R54 | Comp, 4.7K, ±5%, 1/4W | 1066-4725 | Allen-Bradley | CB4725 |
| R55 | Comp, 1K, ±5%, 1/4W | 1066-1025 | Allen-Bradley | CB1025 |
| R56 | Comp, 220Ω, ±5%, 1/4W | 1066-2215 | Allen-Bradley | CB2215 |
| R57 | Comp, 51 Ohm, ±5%, 1/4W | 1066-5105 | Allen-Bradley | CB5105 |
| R58 | Comp, 100Ω, ±5%, 1/4W | 1066-1015 | Allen-Bradley | CB1015 |
| R59 | Comp, 100Ω, ±5%, 1/4W | 1066-1015 | Allen-Bradley | CB1015 |
| R60 | Comp, 10K, ±5%, 1/4W | 1066-1035 | Allen-Bradley | CB1035 |
| R61 | Comp, 10K, ±5%, 1/4W | 1066-1035 | Allen-Bradley | CB1035 |
| R62 | Comp, 1.8K, ±5%, 1/4W | 1066-1825 | Allen-Bradley | CB1825 |
| R63 | Comp, 100Ω, ±5%, 1/4W | 1066-1015 | Allen-Bradley | CB1015 |
| R64 | Comp, 10K, ±5%, 1/4W | 1066-1035 | Allen-Bradley | CB1035 |
| R65 | Comp, 10K, ±5%, 1/4W | 1066-1035 | Allen-Bradley | CB1035 |
| R66 | Comp, 1K, ±5%, 1/4W | 1066-1025 | Allen-Bradley | CB1025 |
| R67 | Comp, 10K, ±5%, 1/4W | 1066-1035 | Allen-Bradley | CB1035 |
| R68 | Comp, 5.1K, ±5%, 1/4W | 1066-5125 | Allen-Bradley | CB5125 |
| R69 | Comp, 430Ω, ±5%, 1/4W | 1066-4315 | Allen-Bradley | CB4315 |
| R70 | Comp, 680Ω, ±5%, 1/4W | 1066-6815 | Allen-Bradley | CB6815 |
| R71 | Comp, 510Ω, ±5%, 1/4W | 1066-5115 | Allen-Bradley | CB5115 |
| R72 | Comp, 51 Ohm, ±5%, 1/4W | 1066-5105 | Allen-Bradley | CB5105 |
| R73 | Comp, 10K, ±5%, 1/4W | 1066-1035 | Allen-Bradley | CB1035 |
| R74 | Comp, 10K, ±5%, 1/4W | 1066-1035 | Allen-Bradley | CB1035 |
| R75 | Comp, 100Ω, ±5%, 1/4W | 1066-1015 | Allen-Bradley | CB1015 |
| R76 | Comp, 3K, ±5%, 1/4W | 1066-3025 | Allen-Bradley | CB3025 |
| R77 | Comp, 430Ω, ±5%, 1/4W | 1066-4315 | Allen-Bradley | CB4315 |
| R78 | Comp, 27Ω, ±5%, 1/4W | 1066-2705 | Allen-Bradley | CB2705 |
| R79 | Comp, 430Ω, ±5%, 1/4W | 1066-4315 | Allen-Bradley | CB4315 |
| R80 | Comp, 68Ω, ±5%, 1/4W | 1066-6805 | Allen-Bradley | CB6805 |
| R81 | Comp, 1.6K, ±5%, 1/4W | 1066-1625 | Allen-Bradley | CB1625 |
| R82 | Comp, 3.3K, ±5%, 1/4W | 1066-3325 | Allen-Bradley | CB3325 |
| R83 | Comp, 100Ω, ±5%, 1/4W | 1066-1015 | Allen-Bradley | CB1015 |
| R84 | Comp, 68Ω, ±5%, 1/4W | 1066-6805 | Allen-Bradley | CB6805 |
| R85 | Comp, 160Ω, ±5%, 1/4W | 1066-1615 | Allen-Bradley | CB1615 |
| R86 | Comp, 100Ω, ±5%, 1/4W | 1066-1015 | Allen-Bradley | CB1015 |
| R87 | Comp, 2K, ±5%, 1/4W | 1066-2025 | Allen-Bradley | CB2025 |
| R88 | Comp, 1K, ±5%, 1/4W | 1066-1025 | Allen-Bradley | CB1025 |
| R89 | Comp, 150K, ±5%, 1/4W | 1066-1545 | Allen-Bradley | CB1545 |
| R90 | Comp, 5.1K, ±5%, 1/4W | 1066-5125 | Allen-Bradley | CB5125 |
| R91 | MF, 5.62K, ±1%, 1/8W, 100PPM | 1075-0013 | Dale | MFF 1/8 |
| R92 | Comp, 220Ω, ±5%, 1/4W | 1066-2215 | Allen-Bradley | CB2215 |
| R93 | Comp, 68Ω, ±5%, 1/4W | 1066-6805 | Allen-Bradley | CB6805 |
| R94 | Comp, 1.6K, ±5%, 1/4W | 1066-1625 | Allen-Bradley | CB1625 |
| R95 | Comp, 4.3K, ±5%, 1/4W | 1066-4325 | Allen-Bradley | CB4325 |

SEMI-AUTOMATIC CAL/BFO, 4600 (cont.)

| CKT. REF. | DESCRIPTION | CE STOCK NO. | MFR. | MFR. NO. |
|---|---|---|---|---|
| R96 | Comp, 7.5K, ±5%, 1/4W | 1066-7525 | Allen-Bradley | CB7525 |
| R97 | Comp, 100Ω, ±5%, 1/4W | 1066-1015 | Allen-Bradley | CB1015 |
| R98 | Comp, 820Ω, ±5%, 1/4W | 1066-8215 | Allen-Bradley | CB8215 |
| R99 | Comp, 510Ω, ±5%, 1/4W | 1066-5115 | Allen-Bradley | CB5115 |
| R100 | Comp, 47K, ±5%, 1/4W | 1066-4735 | Allen-Bradley | CB4735 |
| R101 | Comp, 30Ω, ±5%, 1/4W | 1066-3005 | Allen-Bradley | CB3005 |
| R102 | Comp, 1K, ±5%, 1/4W | 1066-1025 | Allen-Bradley | CB1025 |
| R103 | MF, 75Ω, ±1%, 1/8W, 100PPM | 1075-0035 | Dale | MFF 1/8 |
| R104 | MF, 75Ω, ±1%, 1/8W, 100PPM | 1075-0035 | Dale | MFF 1/8 |
| R105 | MF, 91.67Ω, ±.1%, 1/10W, 100PPM | 1074-0037 | Electra | MF4C-E |
| R106 | MF, 371.3Ω, ±.1%, 1/10W, 25PPM | 1074-0040 | Electra | MF4C-E |
| R107 | MF, 91.67Ω, ±.1%, 1/10W, 100PPM | 1074-0037 | Electra | MF4C-E |
| R108 | MF, 91.67Ω, ±.1%, 1/10W, 100PPM | 1074-0037 | Electra | MF4C-E |
| R109 | MF, 371.3Ω, ±.1%, 1/10W, 25PPM | 1074-0040 | Electra | MF4C-E |
| R110 | MF, 91.67Ω, +.1%, 1/10W, 100PPM | 1074-0037 | Electra | MF4C-E |
| R111 | Comp, 1K, ±5%, 1/4W | 1066-1025 | Allen-Bradley | CB1025 |
| R112 | Comp, 220Ω, ±5%, 1/4W | 1066-2215 | Allen-Bradley | CB2215 |
| R113 | Pot, 5K, ±10%, 3/4W | 1215-0012 | Helitrim | 89 WR |
| R114 | Comp, 11K, ±5%, 1/4W | 1066-1135 | Allen-Bradley | CB1135 |
| R115 | Comp, 2K, ±5%, 1/4W | 1066-2025 | Allen-Bradley | CB2025 |
| R116 | MF, 5.62K, ±1%, 1/8W, 100PPM | 1075-0013 | Dale | MFF 1/8 |
| | TRANSFORMER | | | |
| T1 | Trifiliar | 1579-0017 | Cushman | |
| T2 | Trifiliar | 1579-0017 | Cushman | |
| | INTEGRATED CIRCUITS | | | |
| U1 | IC-MC7805CP, 5V, Pos, Rgltr | 2025-0088 | Motorola | MC7805CP |
| U2 | IC-MC4044P, Phase Detector | 2025-0066 | Motorola | MC4044P |
| U3 | IC-SN7400N, TTL NAND Gate | 2025-0003 | Fairchild | F7400PC |
| U4 | IC-SN72741P, High Prfm, Op Ampl | 2025-0067 | Fairchild | 741TC |
| U5 | IC-SN74L90N, Decade, Counter | 2025-0071 | National | DM74L90N |
| U6 | IC-SN74L00N, Quad 2 Input NAND Gate | 2025-0036 | T.I. | SN74L00N |
| U7 | IC-CA3012, Wideband Ampl | 2025-0013 | RCA | CA3012 |
| U8 | IC-SN72741P, High Prfm, Op Ampl | 2025-0067 | Fairchild | 741TC |
| U9 | IC-SN72741P, High Prfm, Op Ampl | 2025-0067 | Fairchild | 741TC |
| | MIXER | | | |
| Z1 | Double Balanced | 2010-0005 | Cushman | |

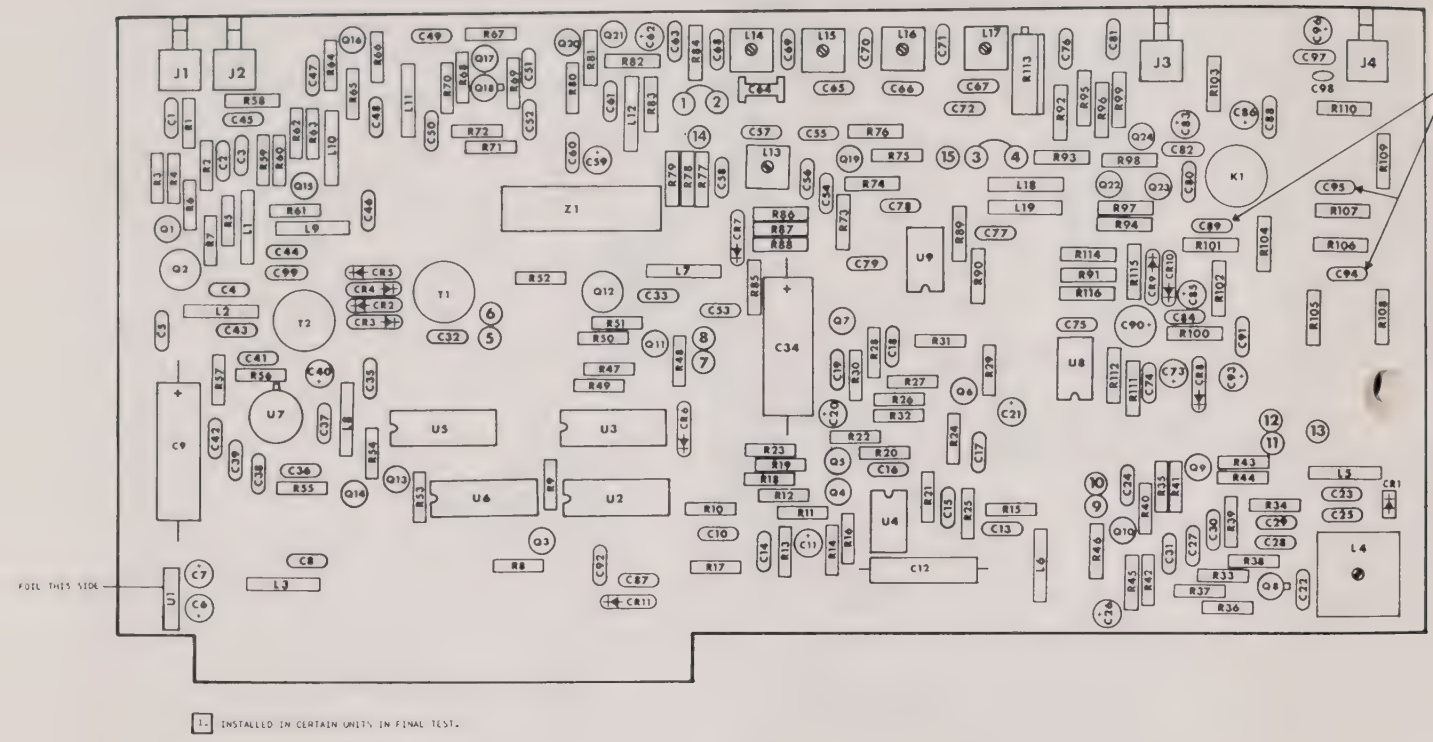


[1] INSTALLED IN CERTAIN UNITS IN FINAL TEST.

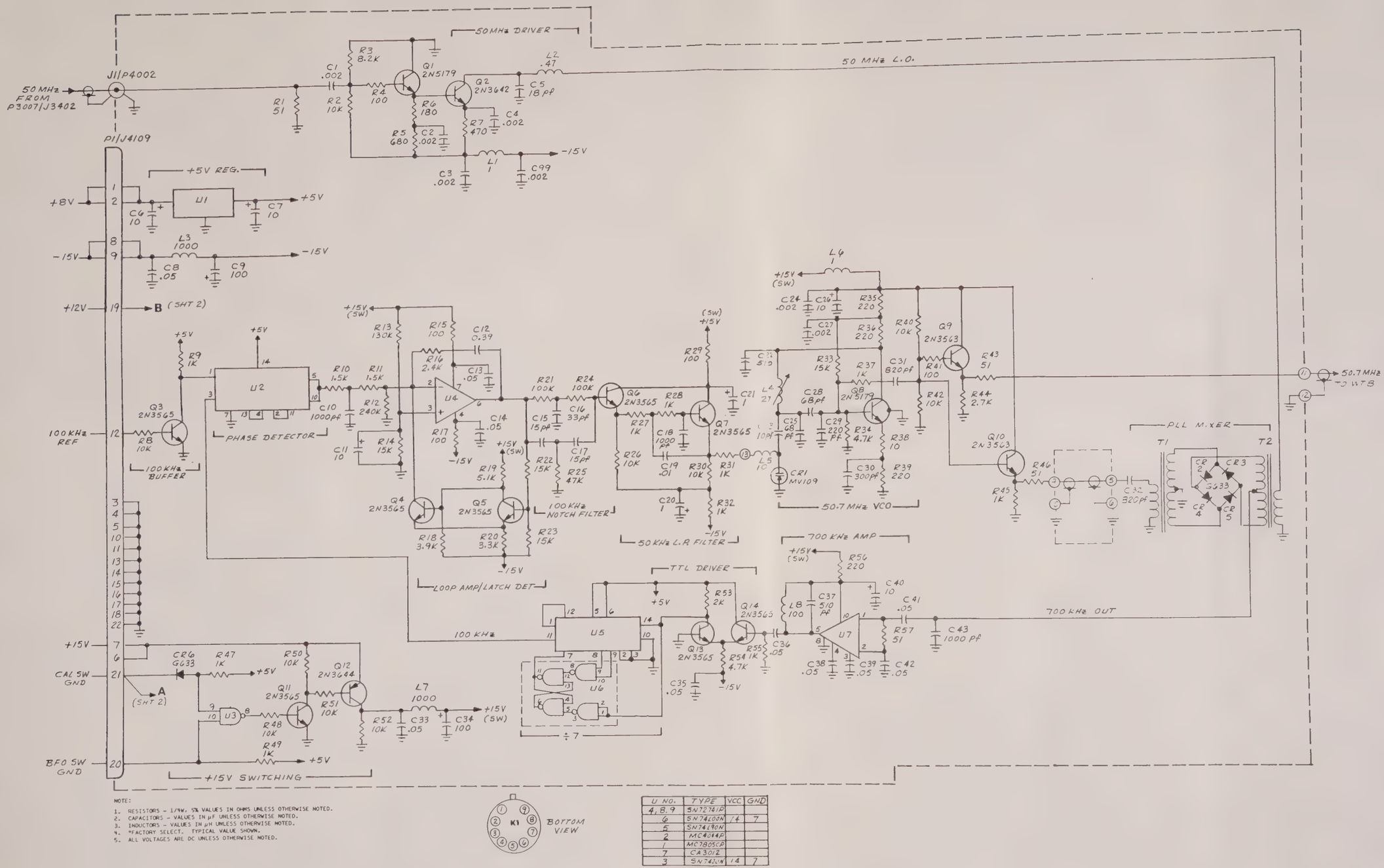


NOTE:
1. RESISTORS - 1/4W, 5% VALUES IN OHMS UNLESS OTHERWISE NOTED.
2. CAPACITORS - VALUES IN μF UNLESS OTHERWISE NOTED.
3. INDUCTORS - VALUES IN μH UNLESS OTHERWISE NOTED.
4. *FACTORY SELECT. TYPICAL VALUE SHOWN.
5. ALL VOLTAGES ARE DC UNLESS OTHERWISE NOTED.

| U NO. | TYPE | VCC | GND |
|---|---|---|---|
| 4, 8, 9 | SN72741P | | |
| 6 | SN74L00N | 14 | 7 |
| 5 | SN74L90N | | |
| 2 | MC4044P | | |
| 1 | MC7805CP | | |
| 7 | CA3012 | | |
| 3 | SN74J0N | 14 | 7 |

5601**0063**3

Figure 31. Semi-Automatic CAL/BFO, 4600, sheet 1.

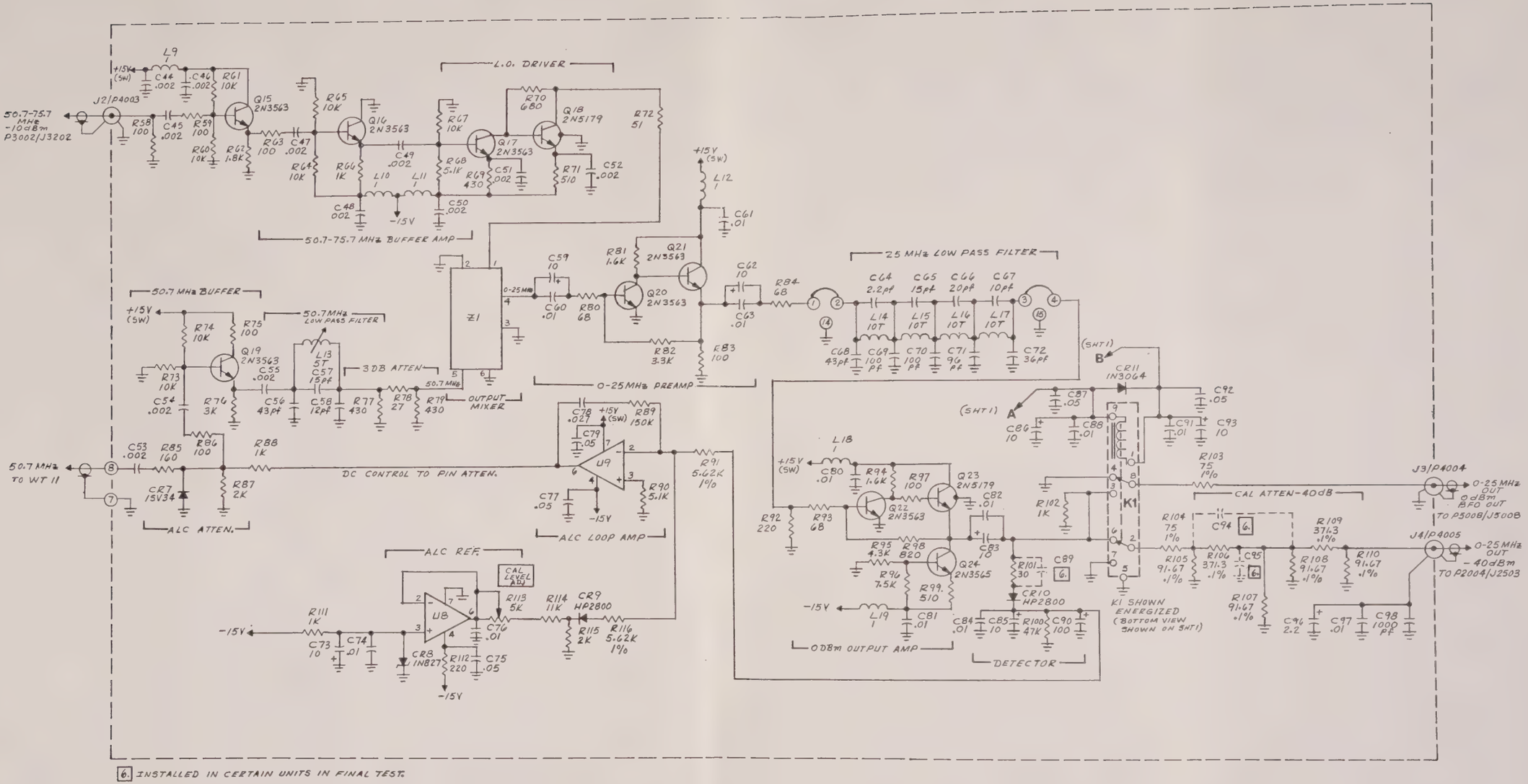


5601-0063-3

Figure 32. Semi-Automatic CAL/BFO, 4600, sheet 2.

POWER SUPPLY, 4700

| CKT. REF. | DESCRIPTION | CE STOCK NO. | MFR. | MFR. NO. |
|---|---|---|---|---|
| 4700 | Power Supply PCB Assy | 7001-0298 | Cushman | |
| | P.C. Board | 1780-0558 | Cushman | |
| | CAPACITORS | | | |
| C1 | Elct, 4700μF, +150-10%, 35V | 1014-0018 | ITT ELNA | 35T4700 |
| C2 | Elct, 1μF, ±10%, 25V | 1013-0004 | Sprague | 30D105G025BA5 |
| C3 | Elct, 1μF, ±10%, 25V | 1013-0004 | Sprague | 30D105G025BA5 |
| C4 | Elct, 1μF, ±10%, 25V | 1013-0004 | Sprague | 30D105G025BA5 |
| C5 | Elct, 4700μF, +150-10%, 35V | 1014-0018 | ITT ELNA | 35T4700 |
| C6 | Elct, 1μF, ±10%, 25V | 1013-0004 | Sprague | 30D105G025BA5 |
| C7 | Elct, 1μF, ±10%, 25V | 1013-0004 | Sprague | 30D105G025BA5 |
| C8 | Elct, 4000μF, +75-10%, 25 | 1014-0005 | Sprague | 39D408G025JS5 |
| C9 | Elct, 4000μF, +75-10%, 25V | 1014-0005 | Sprague | 39D408G025JS5 |
| C10 | Elct, 1μF, ±10%, 25V | 1013-0004 | Sprague | 39D105G025BA5 |
| C11 | Elct, 1μF, ±10%, 25V | 1013-0004 | Sprague | 39D105G025BA5 |
| C12 | Elct, 1μF, ±10%, 25V | 1013-0004 | Sprague | 39D105G025BA5 |
| | DIODES | | | |
| CR1 | D10 1N5197 | 1281-0024 | Semtech | 1N5197 |
| CR2 | D10 1N5197 | 1281-0024 | Semtech | 1N5197 |
| CR3 | D10 1N5197 | 1281-0024 | Semtech | 1N5197 |
| CR4 | D10 1N5197 | 1281-0024 | Semtech | 1N5197 |
| CR5 | D10 1N4002 | 1281-0023 | ITT | 1N4002 |
| CR6 | D10 1N4002 | 1281-0023 | ITT | 1N4002 |
| CR7 | D10 1N4002 | 1281-0023 | ITT | 1N4002 |
| CR8 | D10 1N4002 | 1281-0023 | ITT | 1N4002 |
| CR9 | D10 1N4002 | 1281-0023 | ITT | 1N4002 |
| CR10 | D10 1N4002 | 1281-0023 | ITT | 1N4002 |
| CR11 | D10 1N4002 | 1281-0023 | ITT | 1N4002 |
| CR12 | D10 1N5197 | 1281-0024 | Semtech | 1N5197 |
| CR13 | D10 1N5197 | 1281-0024 | Semtech | 1N5197 |
| CR14 | D10 1N5197 | 1281-0024 | Semtech | 1N5197 |
| CR15 | D10 1N5197 | 1281-0024 | Semtech | 1N5197 |
| CR16 | D10 1N4002 | 1281-0023 | ITT | 1N4002 |
| CR17 | D10 1N4002 | 1281-0023 | ITT | 1N4002 |
| CR18 | D10 1N4002 | 1281-0023 | ITT | 1N4002 |
| | FUSES | | | |
| F1 | Fast Blow, 3A | 1955-0027 | Littelfuse | 312003 |
| F2 | Fast Blow, 1.5A | 1955-0007 | Littelfuse | 31201.5 |
| F3 | Fast Blow, 5A | 1955-0026 | Littelfuse | 312005 |
| | INTEGRATED CIRCUITS | | | |
| U1 | IC-MC7818CP, 18 Volt, Pos Rgltr | 2025-0103 | Motorola | MC7818CP |
| U2 | IC-MC7815CP, 15 Volt, Pos Rgltr | 2025-0101 | Motorola | MC7815CP |
| U3 | IC-MC7812CP, 12 Volt, Pos Rgltr | 2025-0100 | Motorola | MC7812CP |
| U4 | IC-MC7818CP, 18 Volt, Pos Rgltr | 2025-0103 | Motorola | MC7818CP |
| U5 | IC-MC7815CP, 15 Volt, Pos Rgltr | 2025-0101 | Motorola | MC7815CP |
| U6 | IC-MC7808CP, 8 Volt, Pos Rgltr | 2025-0102 | Motorola | MC7808CP |
| U7 | IC-MC7808CP, 8 Volt, Pos Rgltr | 2025-0102 | Motorola | MC7808CP |
| U8 | IC-MC7808CP, 8 Volt, Pos Rgltr | 2025-0102 | Motorola | MC7808CP |

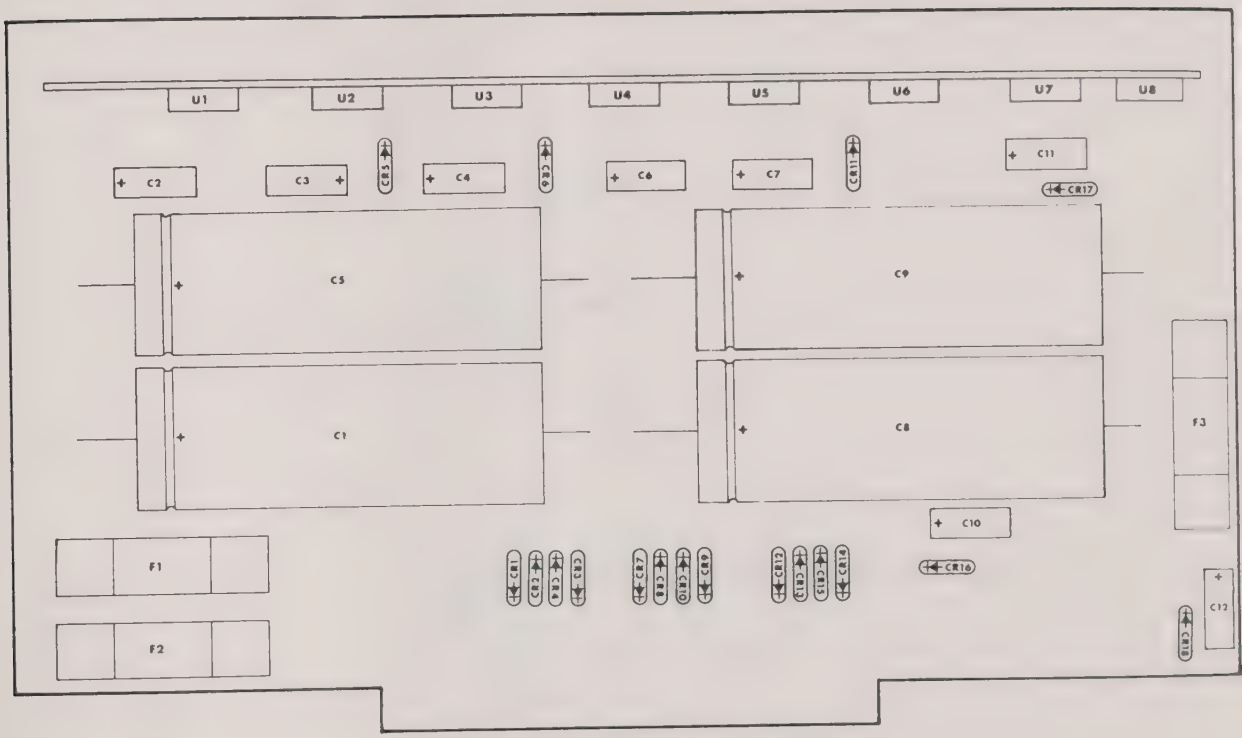
U1
U2
U3
U4
U5
U6
U7
U8
C2
C3
CR5
C4
CR6
C6
C7
CR11
C11
CR17
C5
C9
C1
C8
F3
C10
CR16
F1
F2
CR1
CR2
CR4
CR3
CR7
CR8
CR10
CR9
CR12
CR13
CR15
CR14
C12
CR18

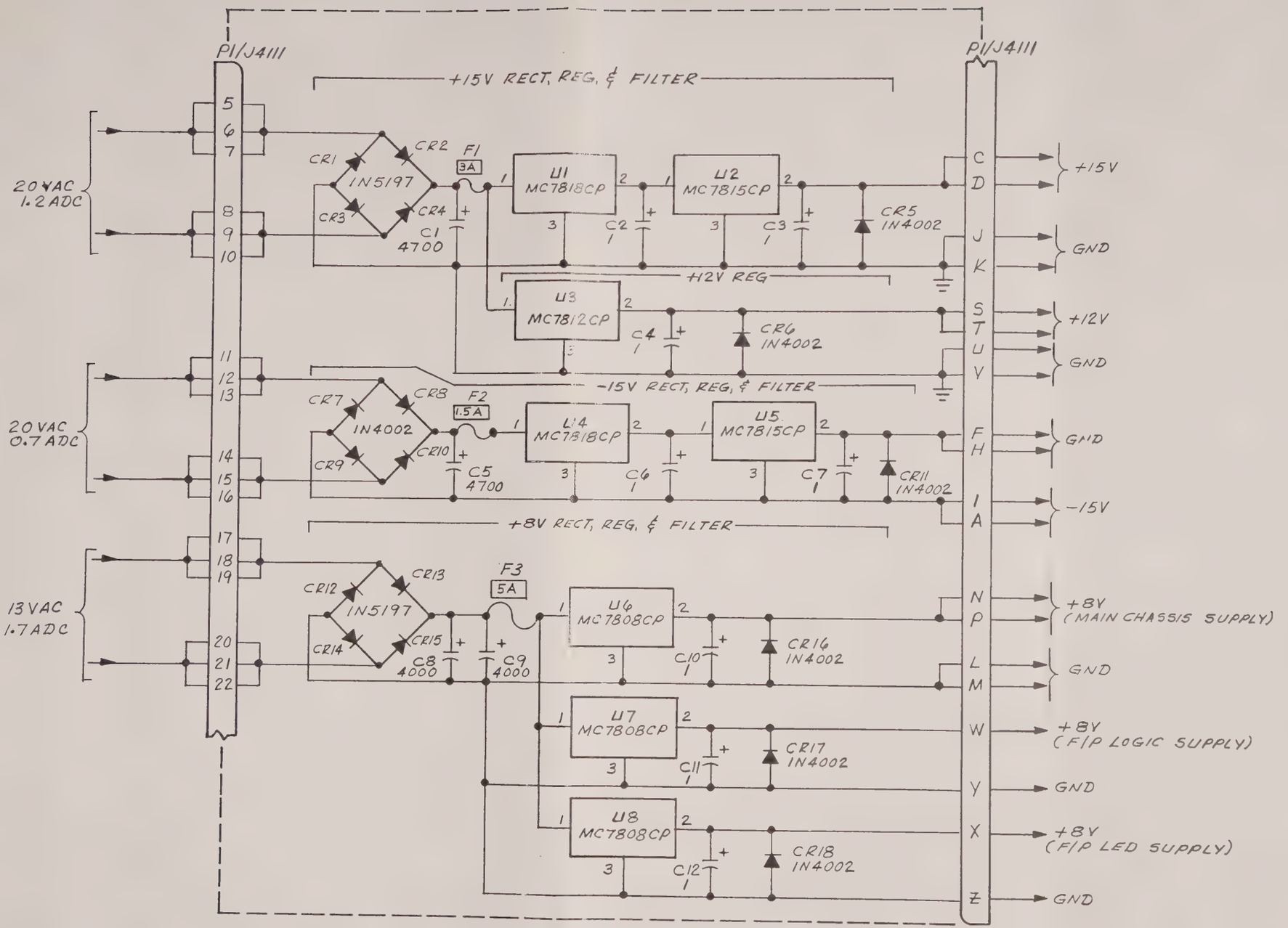


NOTE:

1. RESISTORS - 1/4W, 5% VALUES IN OHMS UNLESS OTHERWISE NOTED.
2. CAPACITORS - VALUES IN μF UNLESS OTHERWISE NOTED.
3. INDUCTORS - VALUES IN μH UNLESS OTHERWISE NOTED.
4. *FACTORY SELECT. TYPICAL VALUE SHOWN.
5. ALL VOLTAGES ARE DC UNLESS OTHERWISE NOTED.
6. ALL FUSES ARE FAST-BLOW.

5601**0063**3

Figure 33. Power Supply, 4700.

REAR PANEL, 5000

| CKT. REF. | DESCRIPTION | CE STOCK NO. | MFR. | MFR. NO. |
|---|---|---|---|---|
| 5000 | Panel Assy - Rear | 7003-0093 | Cushman | |
| | CONNECTORS | | | |
| J1 | 3 Contact, AC, PWR Rcpt, Pnl MT | 2535-0079 | Amphenol | 160-2-N |
| J2 | 50Ω, BNC, BHD MT, Isolated JK-JK | 2536-0038 | Kings | KC-99-54 |
| J3 | 50Ω, BNC, BHD MT, Isolated JK-JK | 2536-0038 | Kings | KC-99-54 |
| J4 | 50Ω, BNC, BHD MT, JK TO JK | 2536-0055 | Kings | KC-99-33 |
| J5 | 50Ω, BNC, BHD MT, Isolated JK-JK | 2536-0038 | Kings | KC-99-54 |
| J6 | 50Ω, BNC, BHD MT, JK TO JK | 2536-0055 | Kings | KC-99-33 |
| J7 | 50Ω, BNC, BHD MT, JK TO JK | 2536-0055 | Kings | KC-99-33 |
| J8 | 50Ω, BNC, BHD MT, JK TO JK | 2536-0055 | Kings | KC-99-33 |
| | FUSE | | | |
| F1 | Fuse-3, Amp/125V, 3AG, Slow-Blow | 1955-0012 | Littelfuse | 313003 |
| | FUSE HOLDER | | | |
| XF1 | Blk, Knrl Knob Pnl Mt Angle | 1965-0015 | Littelfuse | 342-001 |
| | SWITCH | | | |
| S1 | Spdt, Locking Slide | 1850-0023 | Switchcraft | 46203LR |
| | TRANSFORMER | | | |
| T1 | Xfmr-Pwr | 1575-0027 | Cushman | |
| | POWER CORD | | | |
| P1 | 3-wire, 8 ft, Gray | 3170-0009 | Cushman | |

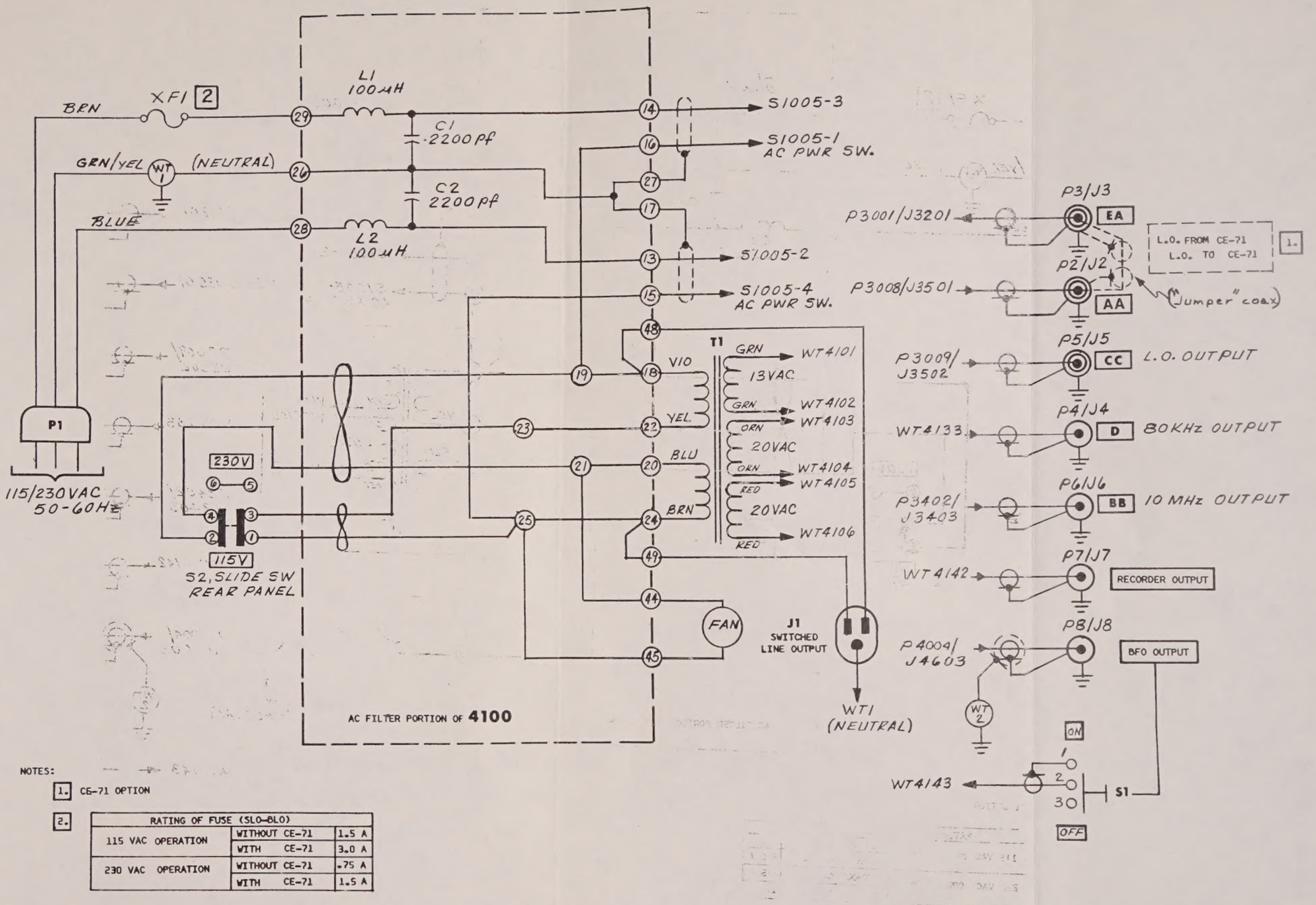


NOTES:

1. CE-71 OPTION

2.

| RATING OF FUSE (SLO-BLO) | | |
|---|---|---|
| 115 VAC OPERATION | WITHOUT CE-71 | 1.5 A |
| | WITH CE-71 | 3.0 A |
| 230 VAC OPERATION | WITHOUT CE-71 | .75 A |
| | WITH CE-71 | 1.5 A |

5601-0063-3

Figure 34. Rear Panel Interconnection Diagram, 5000.

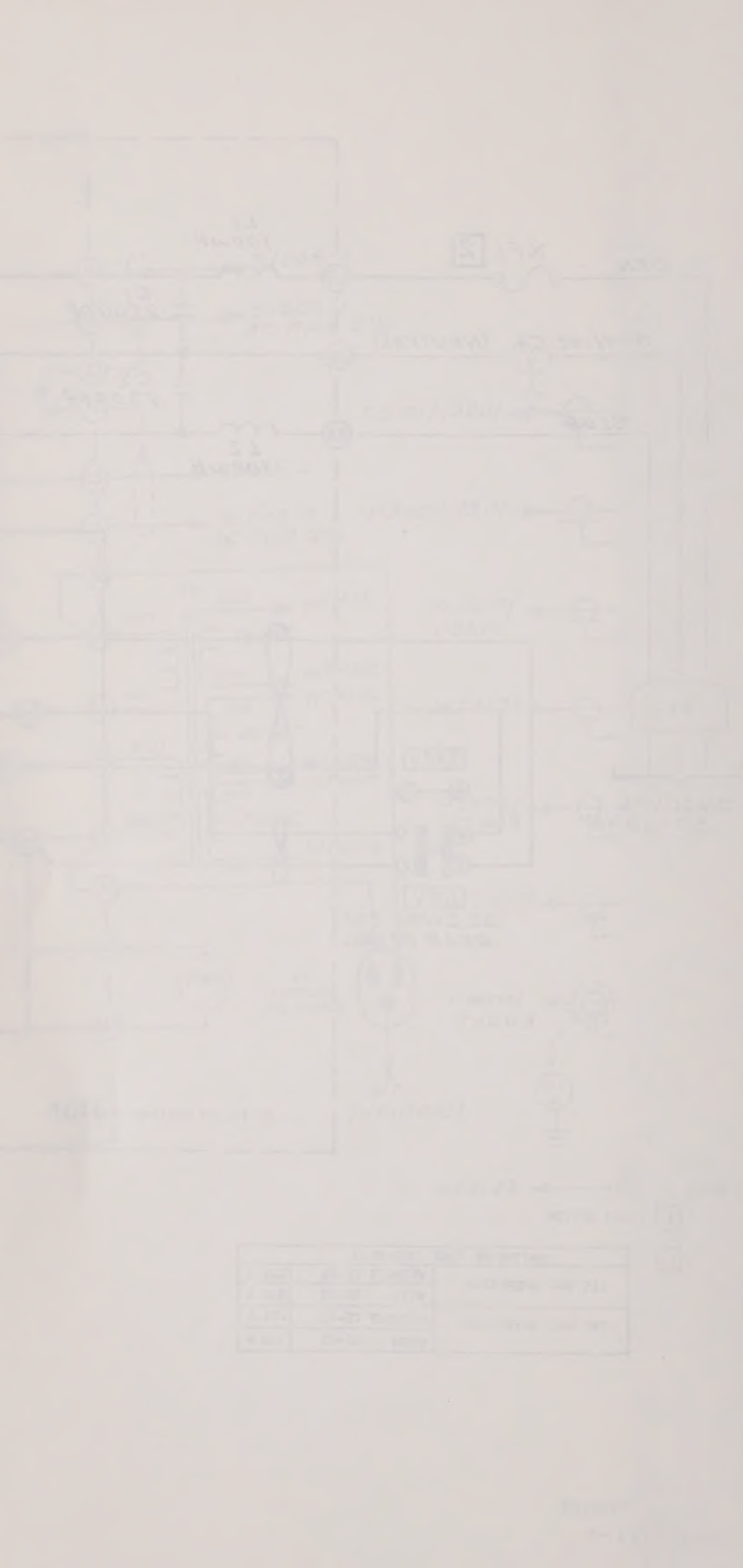

MP MASTER
MA31778